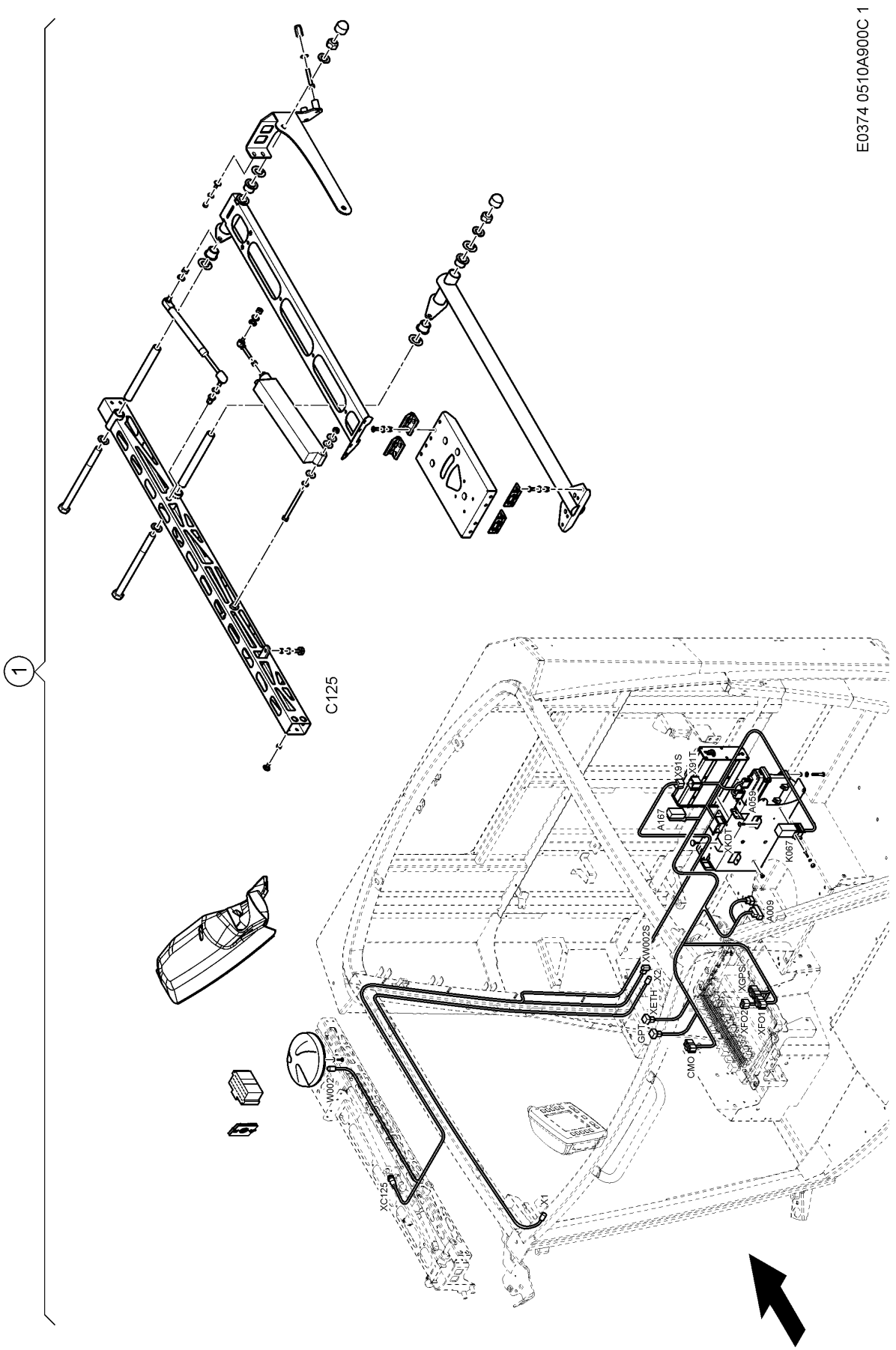

E0374 0510A900C 1