V2104.1

Let's grow together

EFL181

Electric Forklift 1.8T

- On-board charger provides opportunity charging;
- Compact size;
- Big legroom;
- Trustworthy and mature components.

EP EQUIPMENT CO.,LTD
www.ep-ep.com

FEATURE

On-board charger provides opportunity charging

Due to the usage of Li-Ion technology in combination with an onboard charger, the EFL181 is the most versatile truck you can find on the market. Plug it into any standard power outlet and the battery will be opportunity charged. No need for any external charging device. Just Plug&Play.

Compact size

The EFL181 is a very compact truck, while the legroom has been increased for better ergnomics.

Entry-level forklift

The EFL181 was designed as a universal forklift for the daily operation at few hours per day. The focus lies on the flexible operation, opportunity charging and worry-free technology of the truck at a great price point.

Trustworthy and mature components

EFL181 uses 10-year market tested components, which offers safety and reliability.

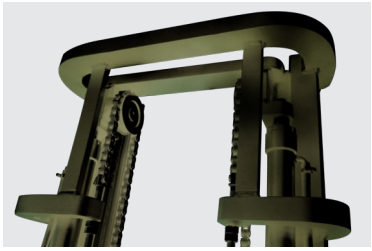

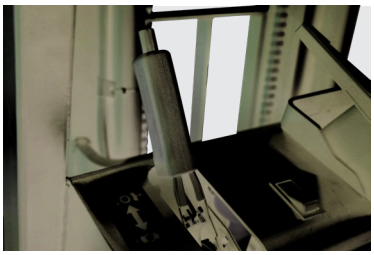

Electric Forklift 1.8T

EFL181

Distinguishing mark				
1.1	Manufacturer			EP
1.2	Model designation			EFL181
1.3	Drive unit			Electrics
1.4	Operator type			seated
1.5	rated capacity	Q	kg	1800
1.6	Load center distance	c	mm	500
1.8	Load distance，centre of drive axle to fork	x	mm	405
1.9	Wheelbase	y	mm	1260
Weight				
2.1	Service weight （include battery）		kg	3030
2.2	Axle loading, laden driving wheels /steering wheels		kg	4395/435
2.3	Axle loading, unladen driving wheels /steering wheels		kg	1300/1730
Types,Chassis				
3.1	Tyre type,driving wheels /steering wheels			solid rubber
3.2	Tyre size, driving wheels（diameter×width）		mm	6.5-10
3.3	Tyre size, steering wheels（diameter×width）		mm	5.00-8
3.5	Wheels, number driving/steering (x=drive wheels)		mm	2x/ 2
3.6	Tread, Driving wheels	b10	mm	905
3.7	Tread, Steering wheels	b11	mm	920
Dimensions				
4.1	Tilt of mast/fork carriage forward/backward	α/ β (°)		6/ 10
4.2	Height, mast lowered	h1	mm	1995
4.3	Free lift （load backrest）	h2	mm	130
4.4	Lift height	h3	mm	3000
4.5	Height, mast extended	h4	mm	4028
4.7	Height of overhead guard (cabin)	h6	mm	2080
4.8	Seat height	h7	mm	1060
4.12	Tow center of pin height	h10	mm	370
4.19	Overall length	l1	mm	2935
4.20	Length to face of forks	l2	mm	2015
4.21	Overall width	b1/ b2	mm	1080
4.22	Fork dimensions	s/ e/ l	mm	40×100×920
4.23	Fork carriage class/type A, B			2A
4.24	Fork carriage width	b3	mm	1040
4.31	Ground clearance, laden, below mast	m1	mm	115
4.32	The minimum ground clearance of frame	m2	mm	120
4.34.1	Aisle width for pallets 1000 × 1200 crossways	Ast	mm	3525
4.34.2	Aisle width for pallets 800 × 1200 lengthways	Ast	mm	3725
4.35	Turning radius	Wa	mm	1920
Performance data				
5.1	Travel speed, laden/ unladen		km/ h	8.5/9
5.2	Lifting speed, laden/ unladen		m/ s	0.25/ 0.3
5.3	Lowering speed, laden/ unladen		m/ s	0.43/ 0.45
5.5	Drawbar pull, laden/unladen		N	——
5.6	Max. drawbar pull, laden/unladen (time)		N	10000
5.7	Gradeability, laden/unladen		%	——
5.8	Max. gradeability, laden/unladen		%	10.5/15
5.9	Service brake type			Hydraulic+ Mechanical
5.10	park brake type			Mechanical
Electric-engine				
6.1	Drive motor rating S2 60 min		kW	6
6.2	Lift motor rating at S3 15%		kW	7.5
6.3	The maximum allowed size battery		mm	750X530X210
6.4	Battery voltage/nominal capacity K5		V/ Ah	48V150AH
6.5	Battery weight		kg	115
Addition data				
8.1	Type of drive unit			AC
10.5	Steering type			——
10.7	Sound pressure level at the driver's ear		dB (A)	75

If there are improvements of technical parameters or configurations, no further notice will be given.
The diagram shown may contain non-standard configurations.

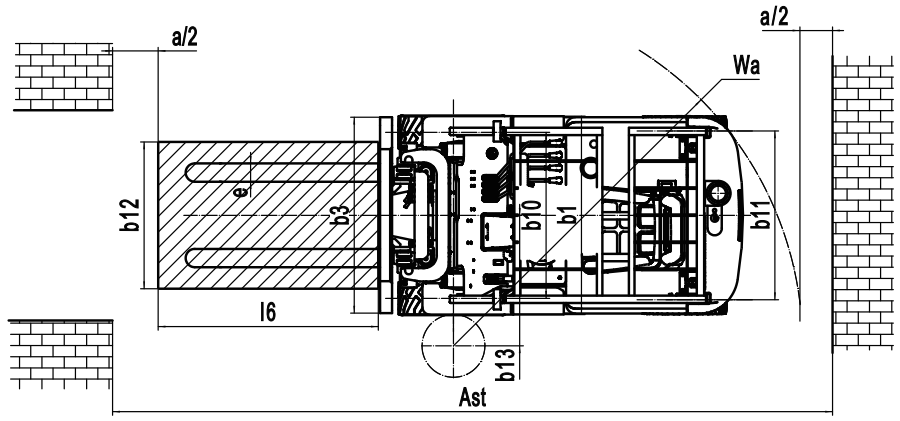

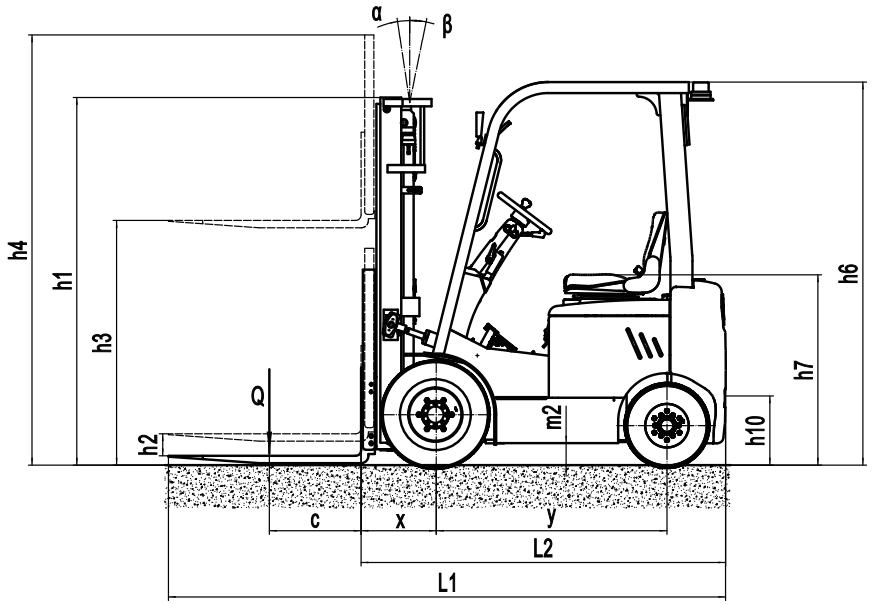

Mast option:

Tpye	Model	Max.fork height h3	Overall height			Free lift		Front Overhang X	Tilt range		Capacity
			Lowered h1	Extended		Without backrest	With backrest h2		FWD α	BWD β	Load capacity at 500 mm Single tire 1.8t
				Without backrest	With backrest h4						
		mm	mm	mm	mm	mm	mm	mm	Deg	Deg	kg
Wide view mast	2W200	2000	1495	2485	3028	130	130	405	6	10	1800
	2W250	2500	1745	2985	3528	130	130	405	6	10	1800
	2W270	2700	1845	3185	3728	130	130	405	6	10	1800
	2W300	3000	1995	3485	4028	130	130	405	6	10	1800
	2W330	3300	2145	3785	4328	130	130	405	6	10	1650
wide view full 2-stage mast	2F250	2500	1778	2985	3528	1293	750	405	6	10	1800
	2F270	2700	1878	3185	3728	1393	850	405	6	10	1800
	2F300	3000	2028	3485	4028	1543	1000	405	6	10	1800
	2F330	3300	2178	3785	4328	1693	1150	405	6	10	1630
wide view full 3-stage mast	3F435	4350	2000	4844	5378	1506	972	418	3	5	1100
	3F450	4500	2050	4994	5528	1556	1022	418	3	5	1050
	3F480	4800	2150	5294	5828	1656	1122	418	3	5	850

RATED CAPACITIES AND LOAD CENTERES GRAPH

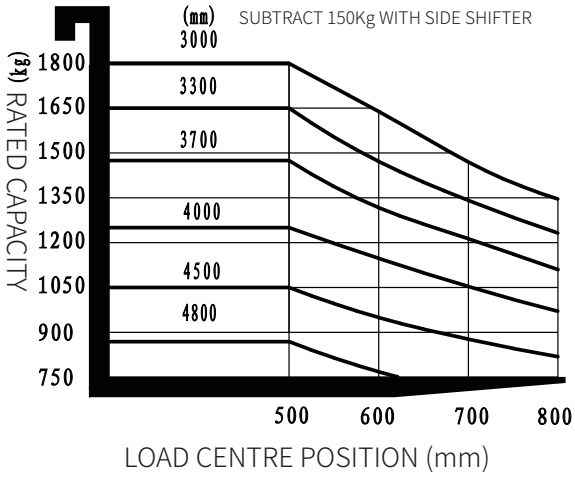

Option:

	Optional items	EFL181
1	Fork length	○
2	Folding fork	○
3	Battery capacity	○
4	Import battery	—
5	Solid rubber tire	●
6	Environmental solid tire	○
7	cold storage	—
8	Lateral change battery	—
9	Weighting system with fork	○
10	Overhead guard	○
11	Mast options	○
12	Attachments	○
13	Side shift	○
14	Proportional value	—
17	Front light	●
28	Back light	○
22	Warning light	●
18	Fire extinguisher	○
19	Water auto-filling system	—
20	Seat	○
21	Seat switch	○
23	With fan heater	—
25	With front windshield wiper	—
26	With rear windshield wiper	—
16	Cockpit	—
24	Doulbe front wheel	—
27	Rearview	○
29	OPS system	○
30	Backrest width	○
31	Side to pull the car	—
32	Air fan	○
33	Charging voltage（220V）	○
35	Drive-in Rack	○

Note: ● standard ○ option — NA