installation **INSTRUCTIONS**

sale **rent** formwork **scaffolding**

BAU-FORM
FORMWORK & SCAFFOLDING

BF 120 WALL FORMWORK

Designed for shuttering straight sections of walls. They consist of a frame and plywood. The frame is made of closed high-quality steel profiles and its anti-corrosion protection is made by powder coating.

The sheathing is made of multi-layer waterproof plywood coated on both sides with a resin coating.

It guarantees high quality of concrete surface and a long life of formwork surfaces. The permissible concrete pressure is 80 kN/m.

The dimensions and weight of BF 120 wall formwork is:

height [cm]	120	150	270	300	330
width [cm]	weight [kg]				
240			327,60	365,10	398,70
120	71,50	85,70	171,20	190,70	212,30
110	65,10	78,30	152,60	172,60	201,30
100	60,70	73,20	138,40	158,30	175,60
90	56,40	68,00	114,30	126,00	140,20
80	49,80	60,50	103,00	113,60	126,70
75	47,60	57,80	98,80	109,00	121,40
70	45,50	55,30	94,50	104,30	116,20
65	43,3	52,80	90,30	99,70	111,00
60	41,20	50,20	86,10	95,00	105,60
55	39,00	49,30	81,90	90,40	100,50
50	36,80	45,00	77,60	85,70	95,20
45	34,60	42,20	73,40	81,20	89,30
40	32,40	39,60	69,00	76,00	84,20
35	28,00	34,50	64,70	71,40	79,80
30	27,30	34,50	60,40	66,70	73,30
25	26,50	32,20	56,30	62,10	68,50
20	25,50	30,60	52,30	57,50	65,40

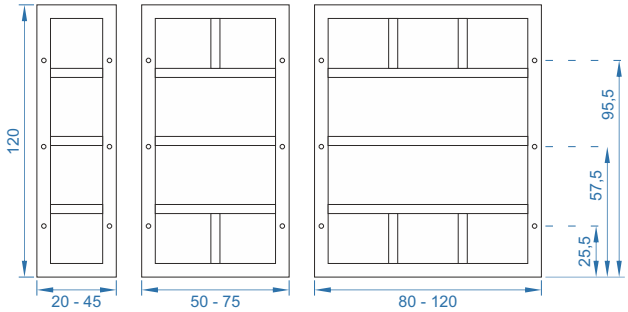

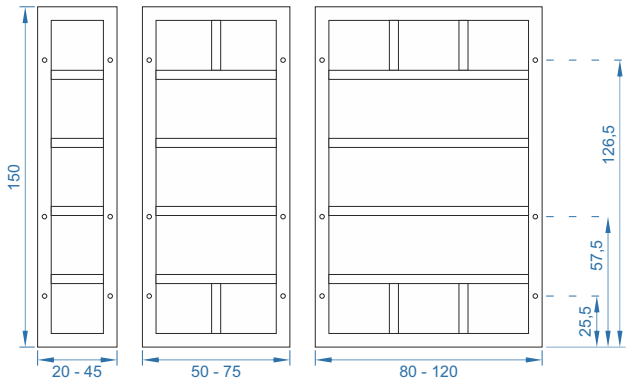

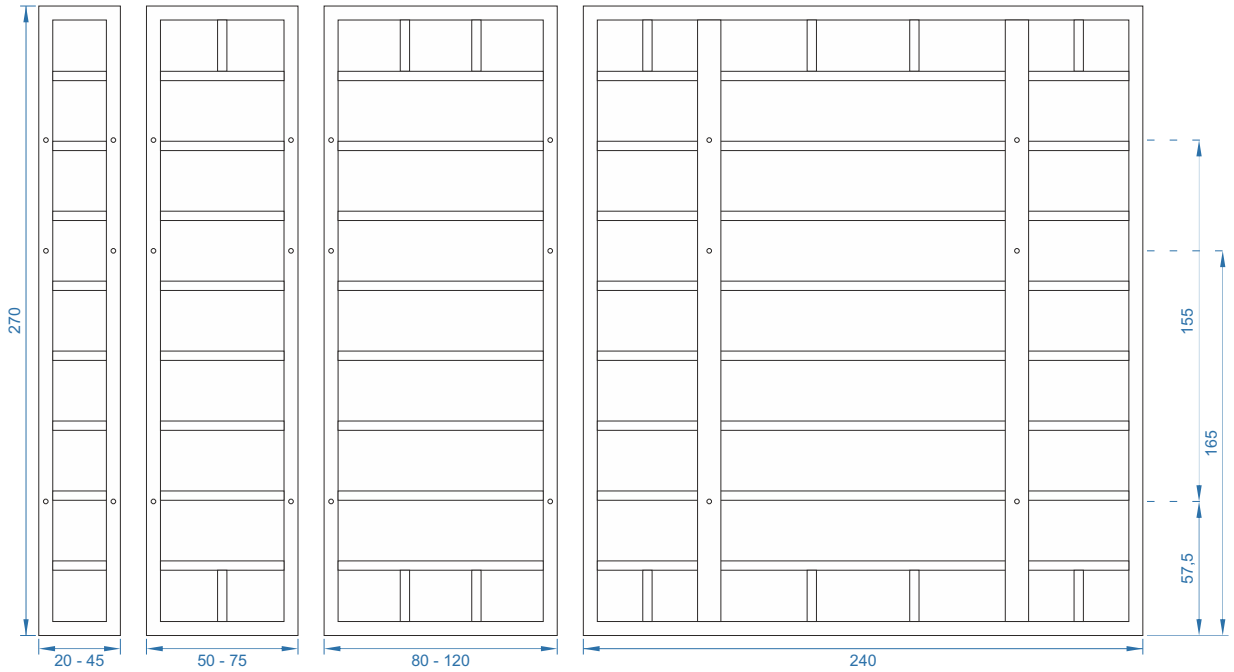

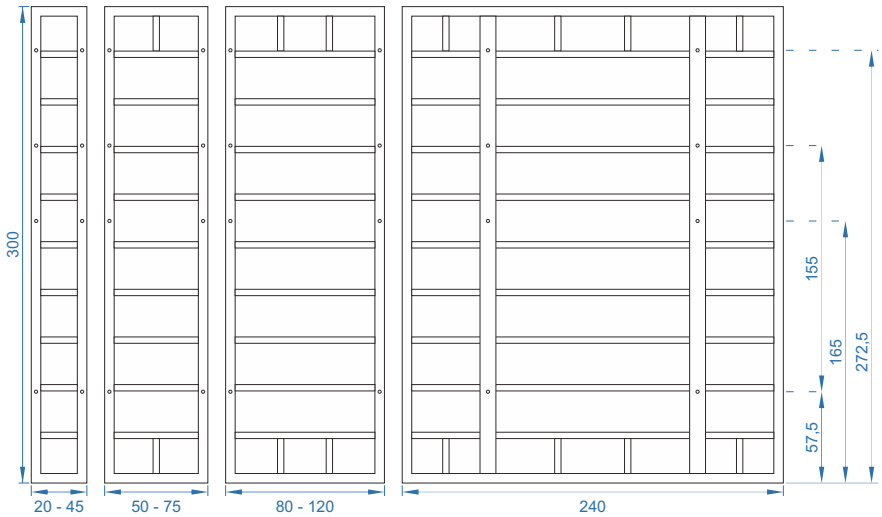

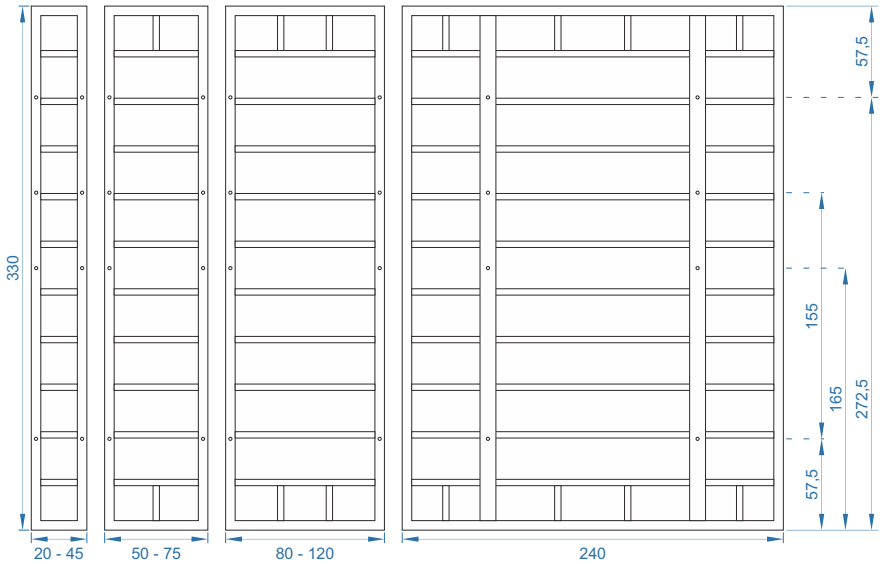

BFS 120 UNIVERSAL PANELS

The construction of a universal panel differs from the design of a linear panel due to several rows of holes for tie rods made at a distance of 50 mm.

The universal panel is used to form square and rectangular posts and to create panel joints in the shape of "T" i "П".

Dimensions and weight of BFS 120 universal panels:

height [cm]	120	150	270	300	330
width [cm]	weight [kg]				
120	73,00	90,70	182,30	199,80	211,30
90	55,00	63,00	121,10	134,50	148,30
75	45,00	63,00	94,50	117,20	129,40

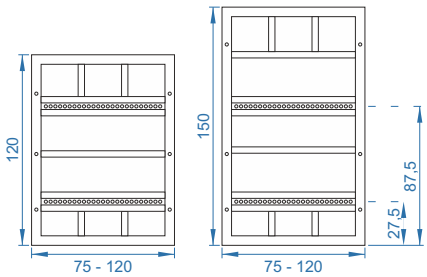

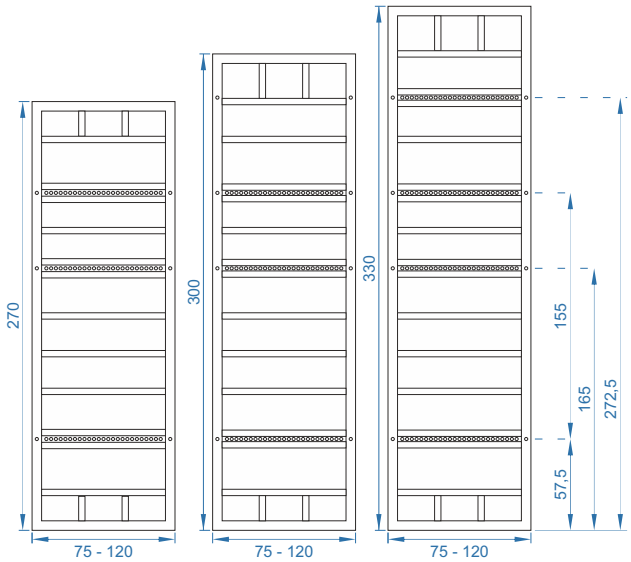

WALLS WITHOUT LEVEL RAISERS

We have walls with a height of 120 cm, 150 cm, 270 cm, 300 cm, 330 cm. We connect 120 cm and 150 cm panels with 2 BF 120 clamps and 2 tie rods per one connection. We connect the 270 cm panels with 3 BF clamps and 2 tie rods per one connection. We connect 300 cm and 330 cm panels with 3 BF clamps and 3 tie rods per one connection.

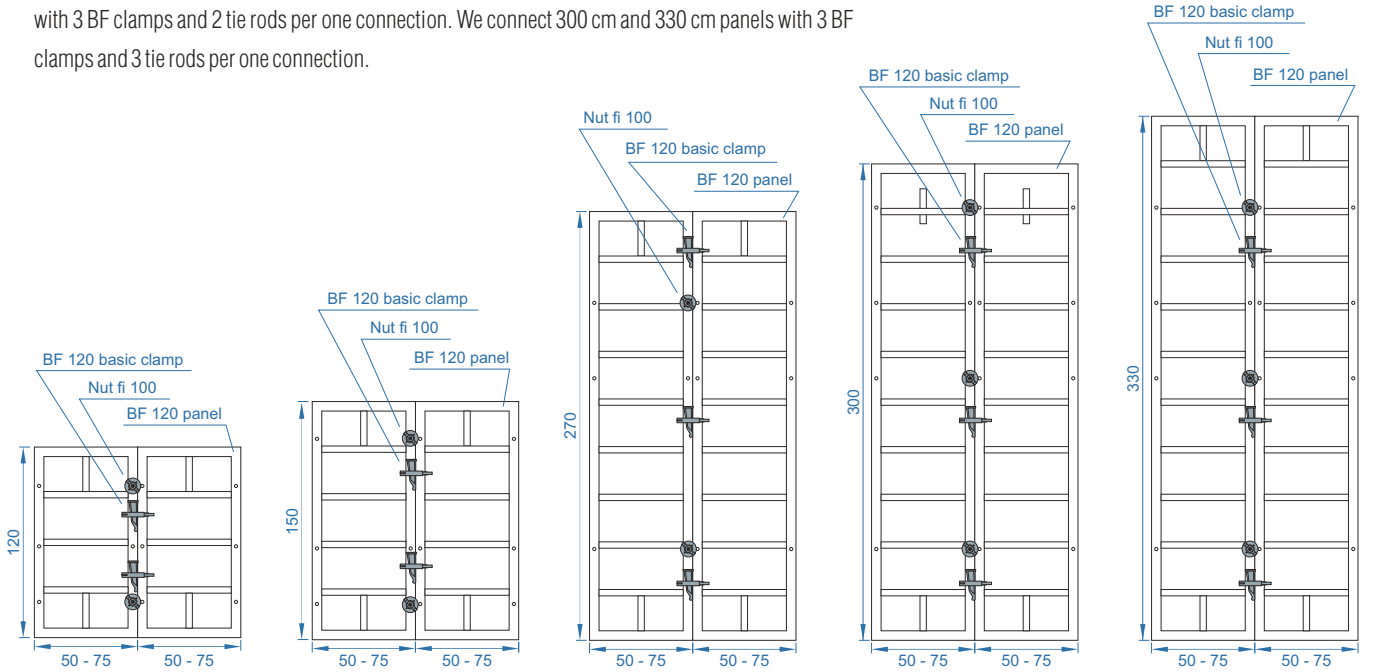

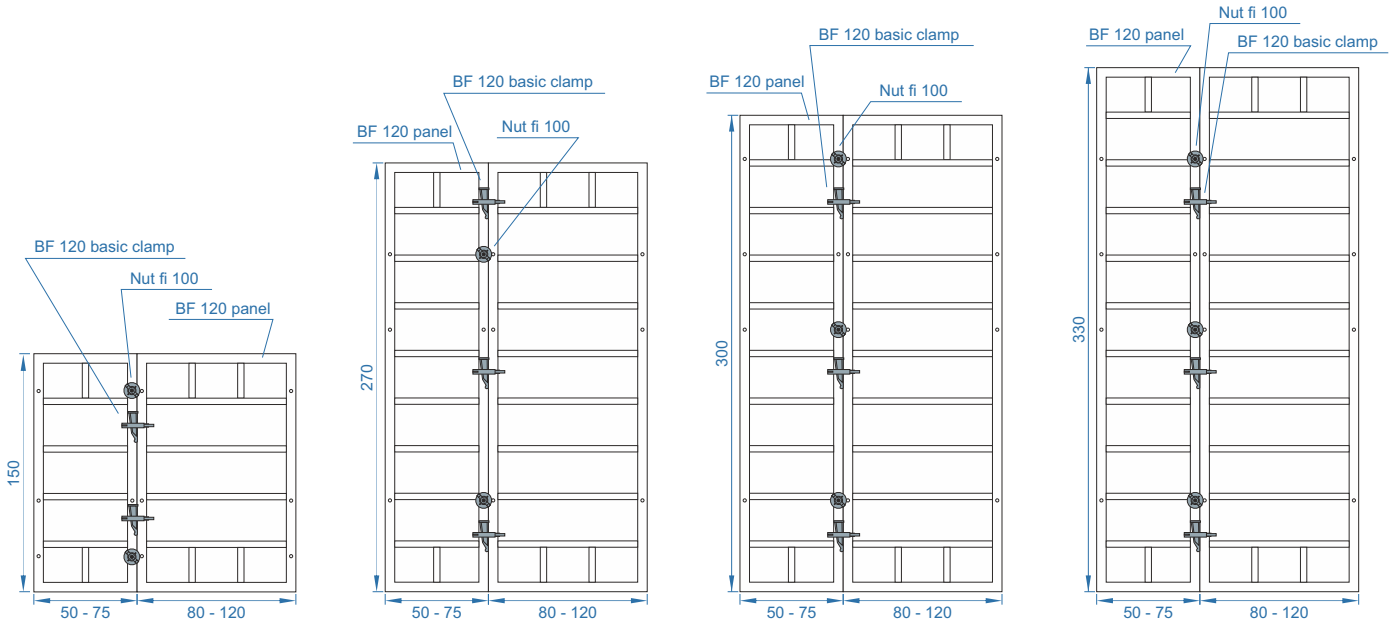

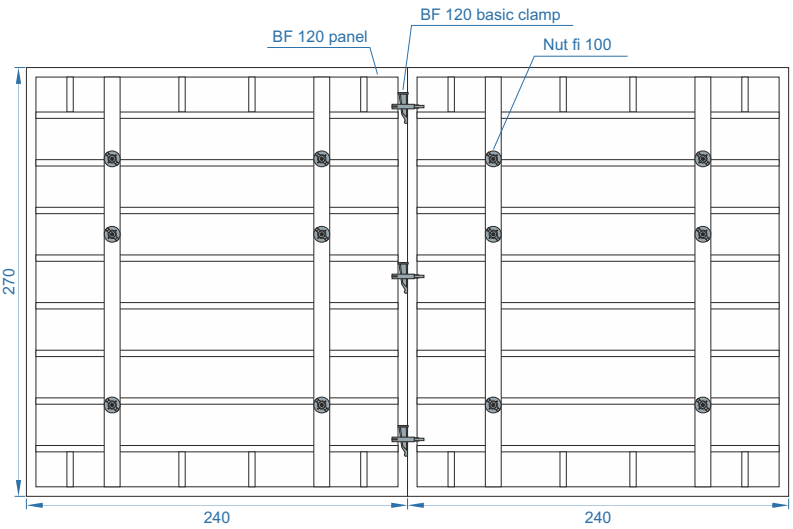

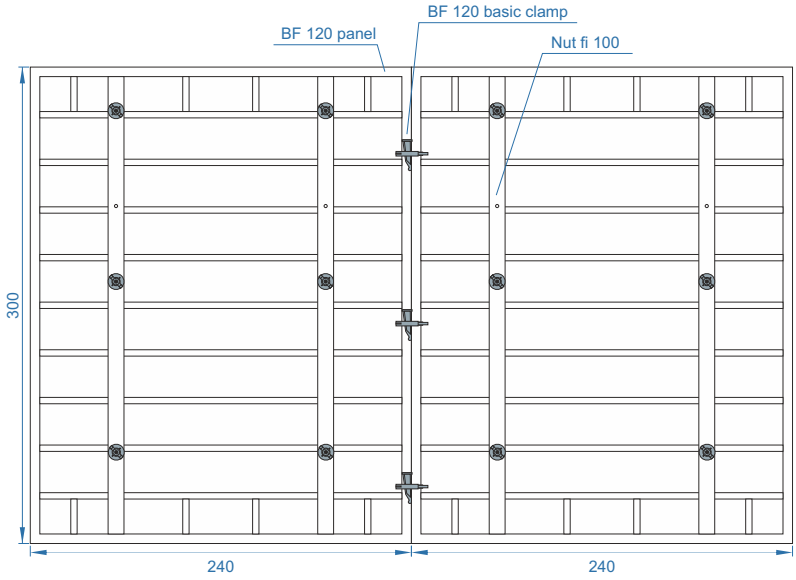

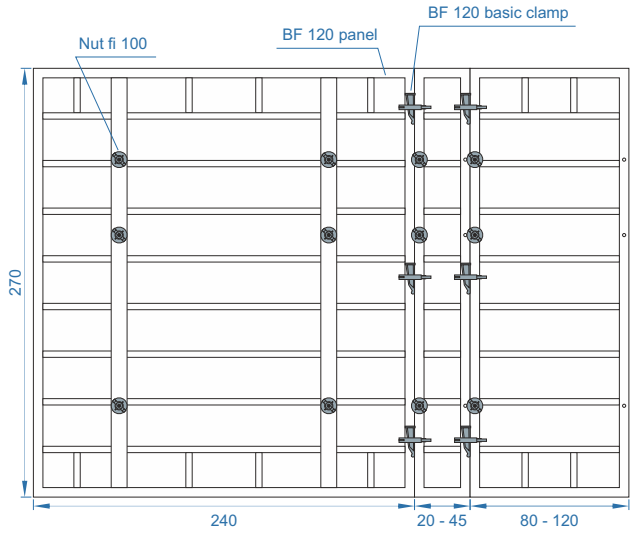

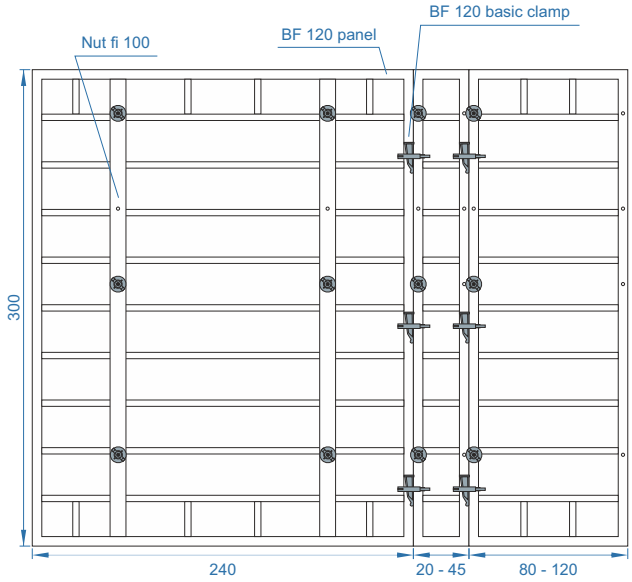

STIFTING BEAM

When joining panels of small widths stifting beams should be used to obtain straight formwork and to stiffen the formwork structure. The beams are connected to the panels by means of a tightener and nuts fi 100. Tightener with a nut fi 100, BF 120 stifting beam.

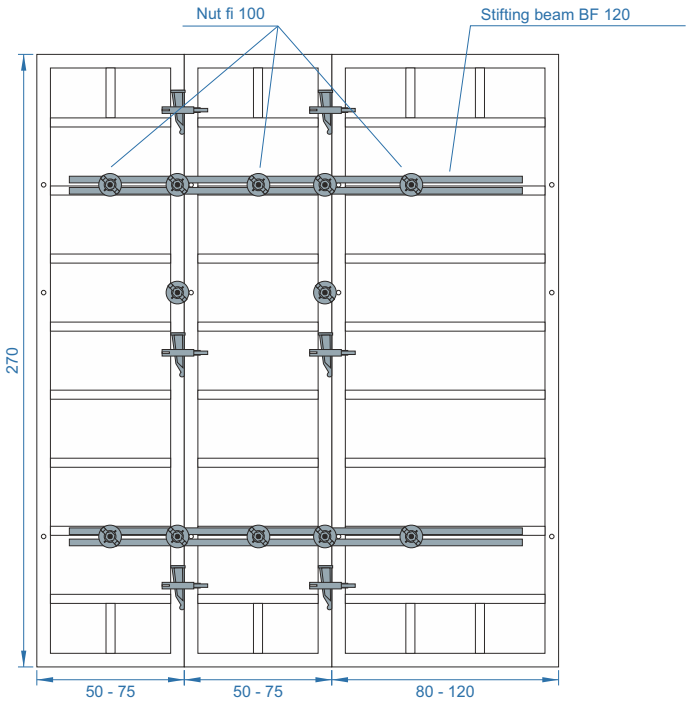

WALLS WITH LEVEL RAISERS

When making wall formwork with level raisers stifting beams should be used for stiffening the construction. Stabilization and alignment of the high wall formwork should be carried out with the help of panel supports. It is possible to use one or two-legged panel supports.

Supports should be assembled every 2 ÷ 2.5 m.

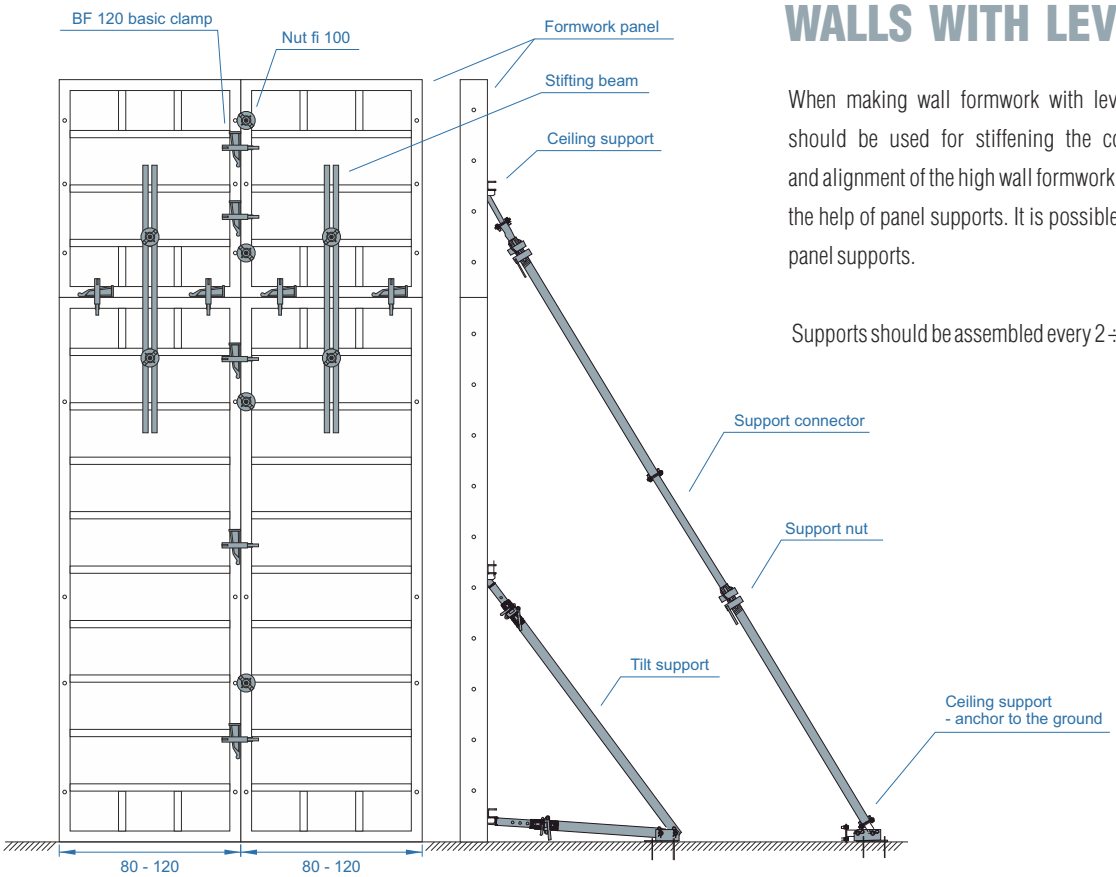

CORNERS

The corners are designed to create the inner side of a right corner of the building's wall. They consist of a frame and sheathing. The internal corner frame is 12 cm thick, and the plywood sheathing is 18 mm thick.

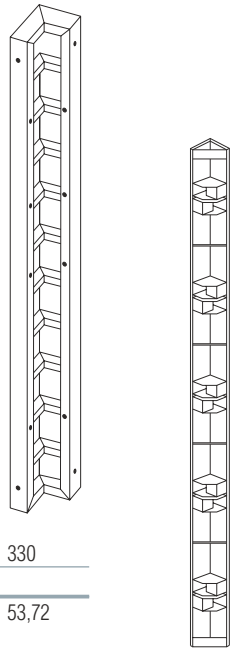

Dimensions and weight of internal corners:

height [cm]	120	150	270	300	330
width [cm]	weight [kg]				
30	40,00	49,00	84,70	93,60	102,50

Dimensions and weight of external corners:

height [cm]	120	150	270	300	330
width [cm]	weight [kg]				
12	19,80	24,78	44,08	48,74	53,72

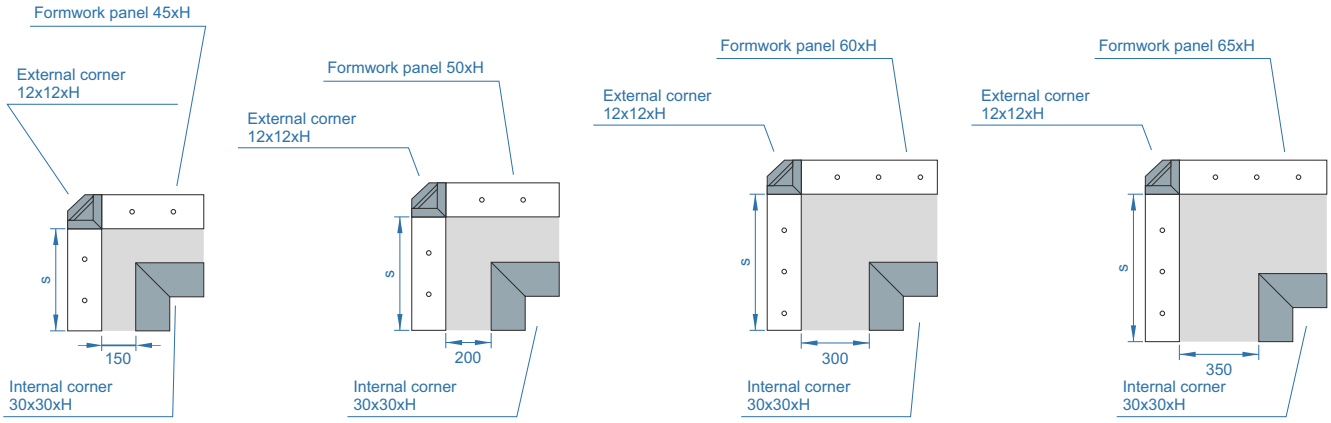

Hinged internal corners are designed to create intermediate angles of the building walls (internal and external formwork). They consist of two frames connected by a hinge and sheathing. The corners are distributed from 60 to 270.

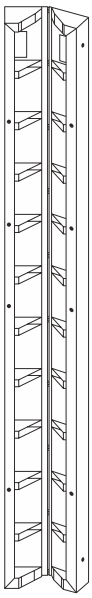

Dimensions and weight of articulated corners:

height [cm]	120	150	270	300	330
width [cm]	weight [kg]				
30	42,00	55,00	89,20	98,40	108,30

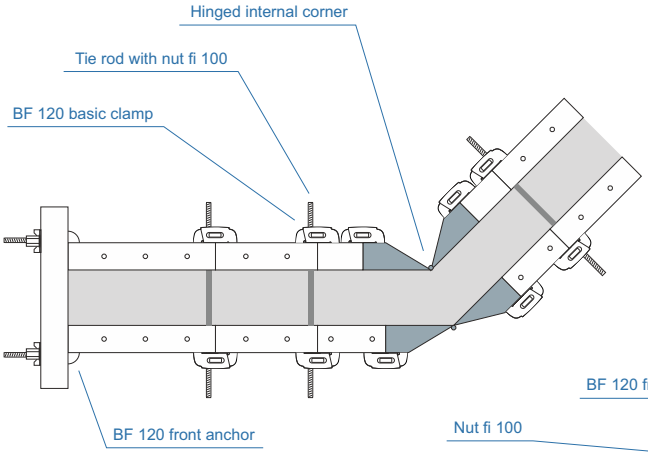

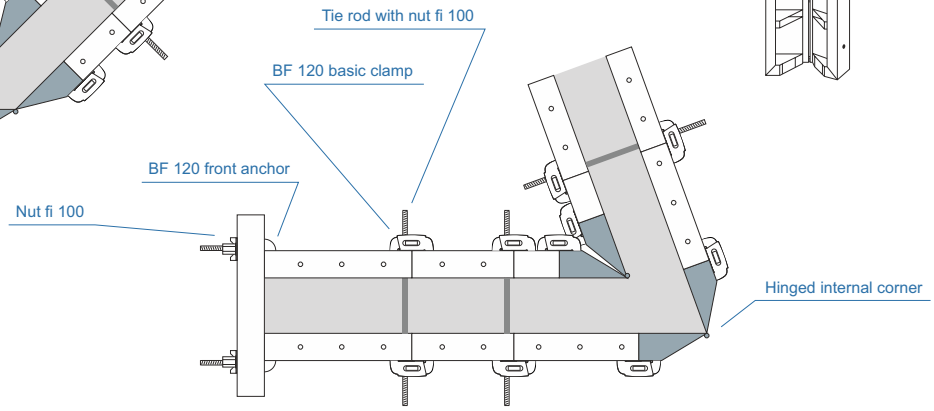

THE CONSTRUCTION OF COLUMNS

In order to best construct post formwork the solution is to use a BFS 120 multi-hole formwork, which allows the construction of columns in a 5 cm pivot module. The 75 cm panels allow the construction of posts from 15 x 15 cm to 60 x 60 cm.

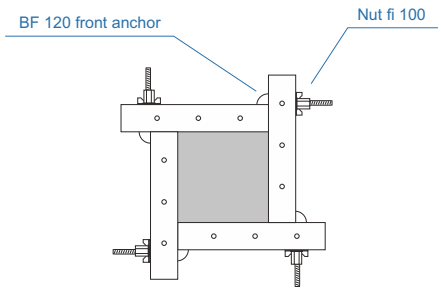

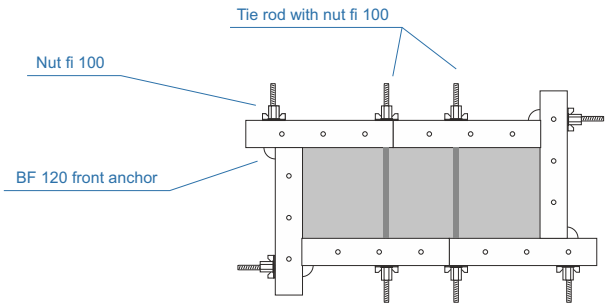

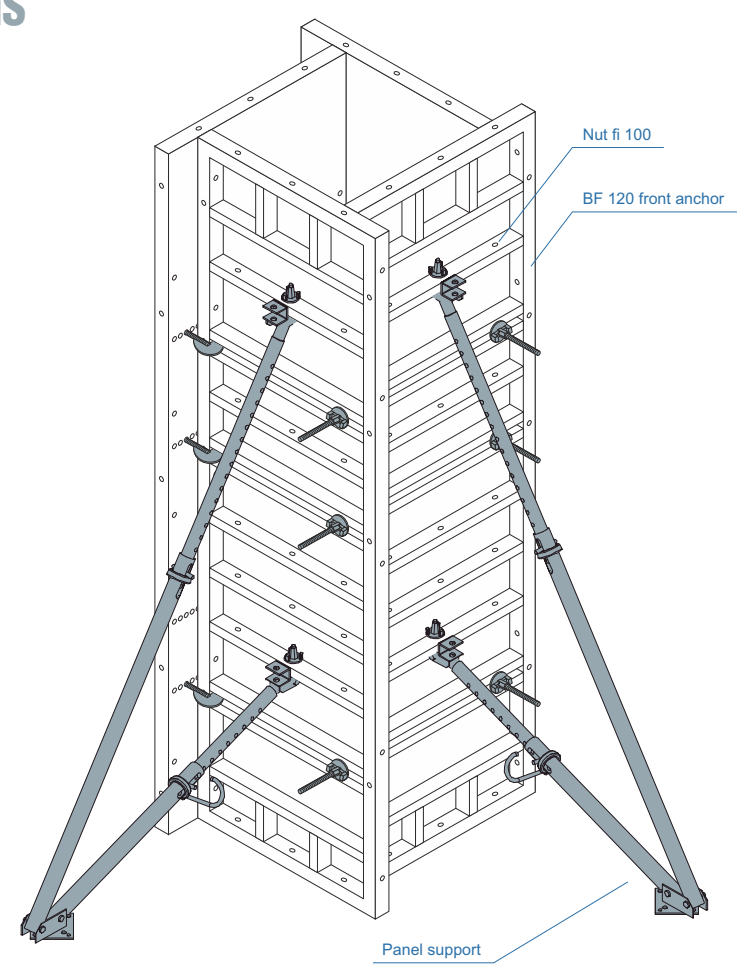

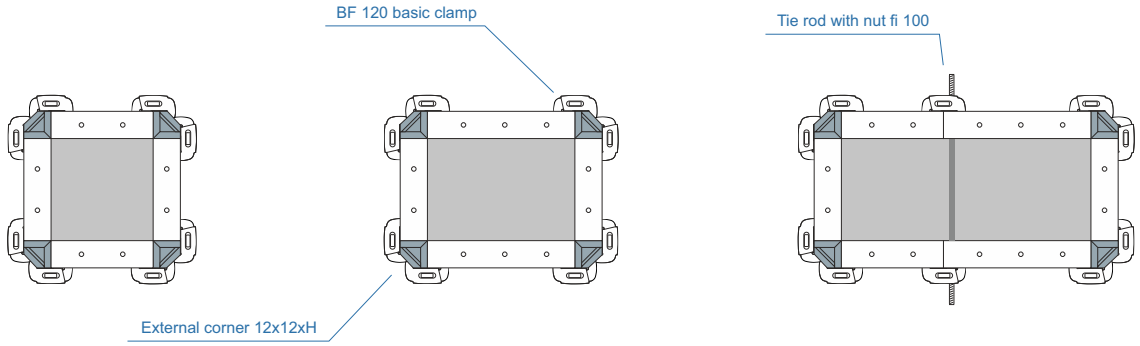

The columns can also be formed from basic formwork using external corners. The above drawings show the examples of this solution.

THE ENDS OF WALLS

For a proper shuttering of the end of a wall use basic panels and external corners. Alternatively, a multi-hole panel can be used with a BF 120 front anchor, disc or combi plates.

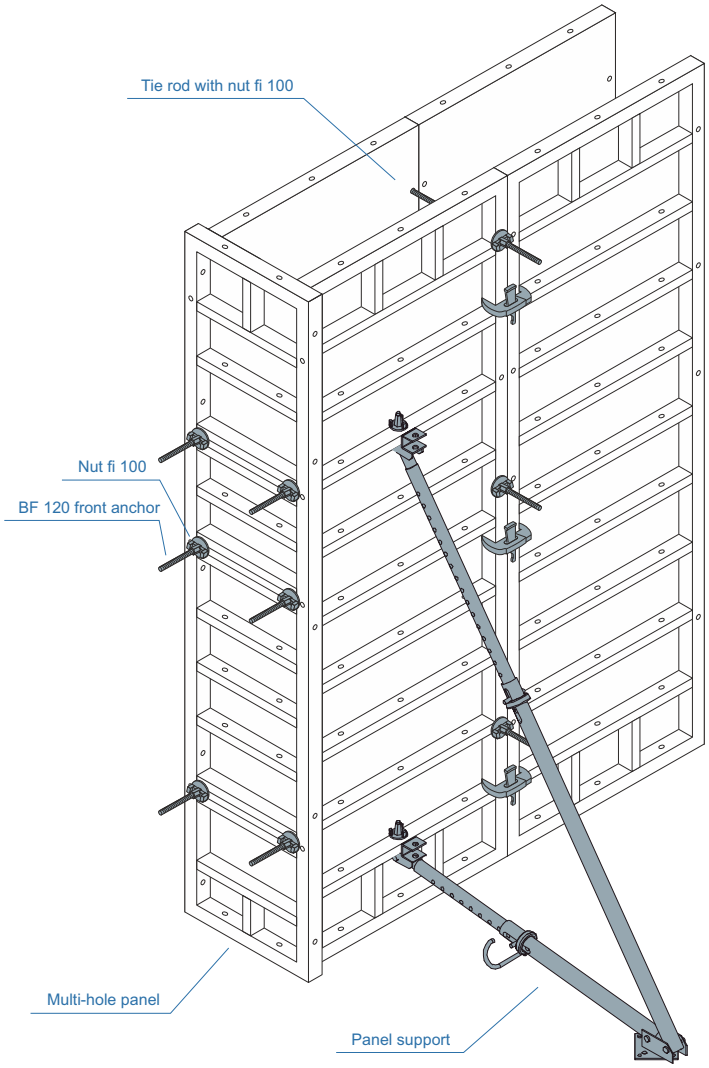

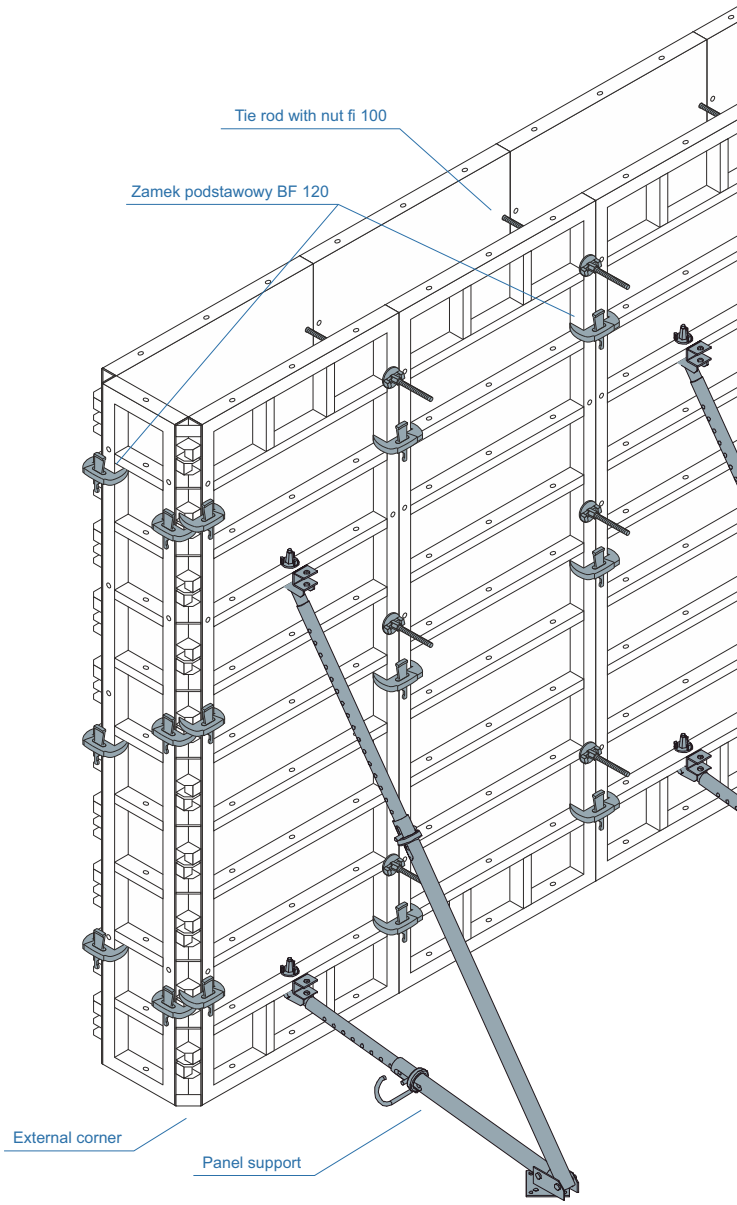

FORMING WITH VARIABLE THICKNESS OF THE WALL

Forming formwork with changing the wall thickness can be done with the help of a internal corner, front anchors with disc or combi plates.

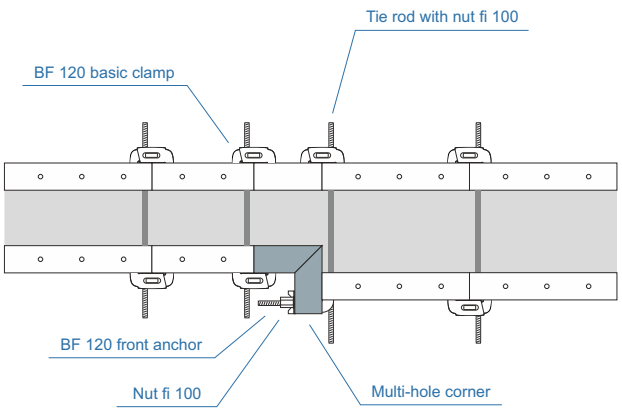

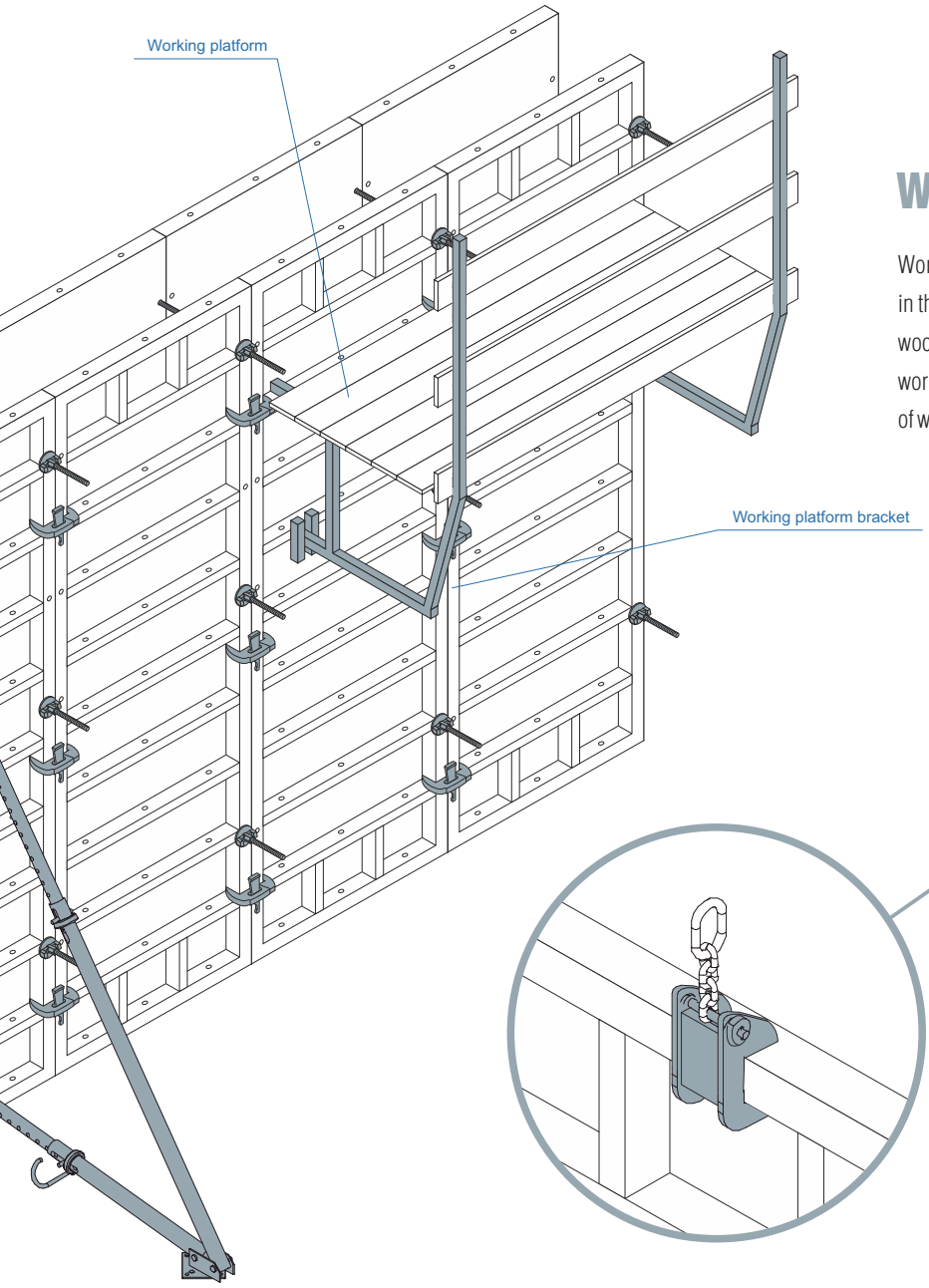

WORKING PLATFORM

Working platforms should be made with brackets attached in the holes of formwork panels that constitute the basis for laying wooden platforms, handrails and curbs. Properly assembled working platforms allow free and completely safe execution of work.

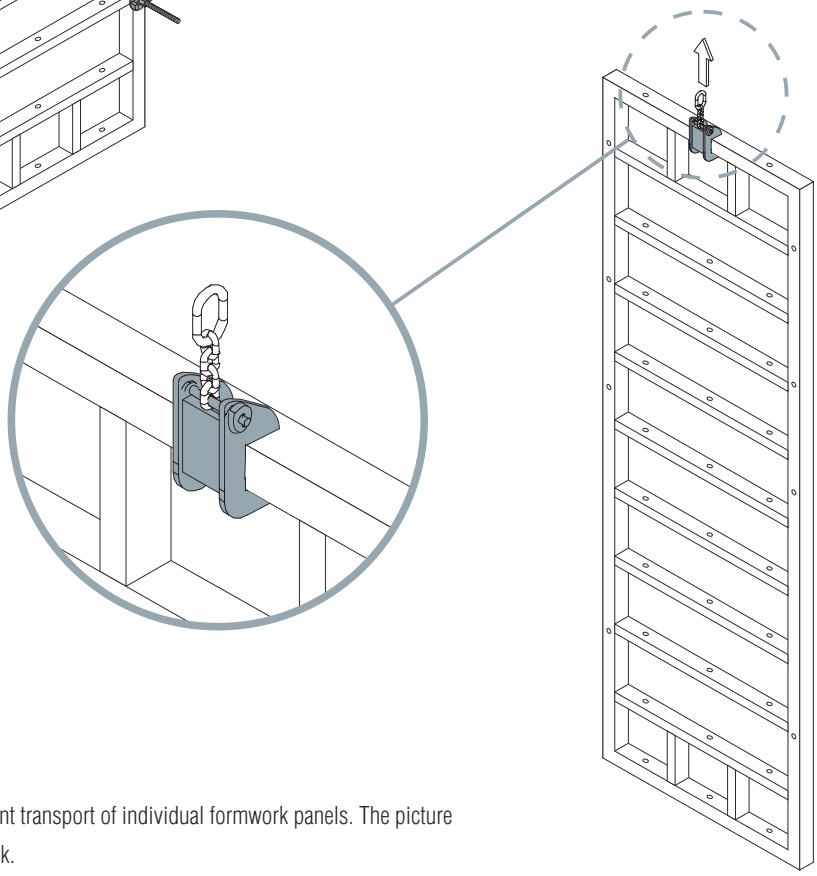

WALL TRANSPORT

The transportation hook allows safe and efficient transport of individual formwork panels. The picture shows how to assemble the transportation hook.

CEILING FORMWORK

BAU-FORM company offers a traditional ceiling formwork system. It is divided into a support system including a ceiling support, tripod and head, as well as sheathing including H20 girder and plywood. This system is ideal for formwork ceilings of any shape, substrings of various cross-sections, balconies, etc.

The advantages of this system is a quick assembly and disassembly, any height of ceiling, safety in operation and high load capacity.

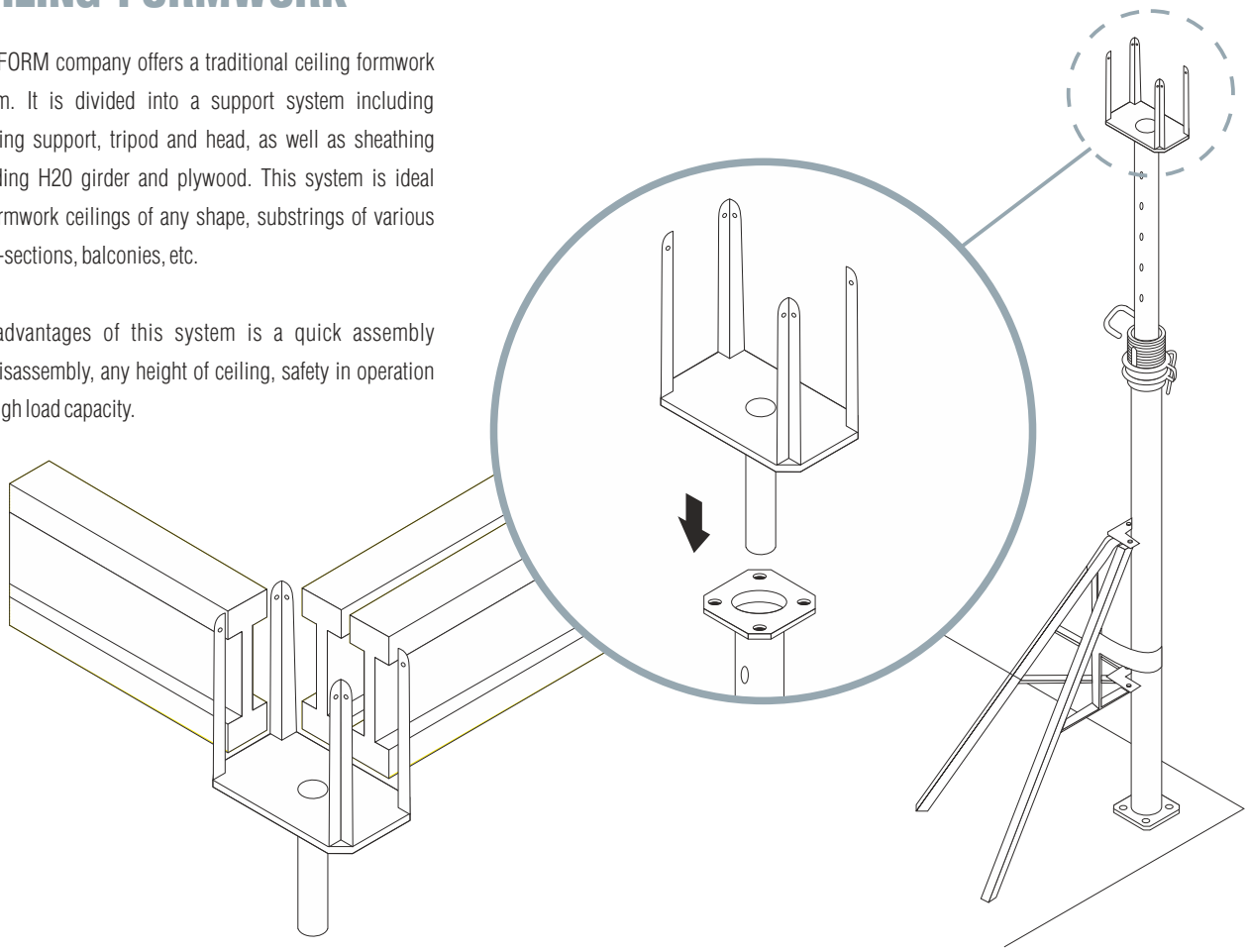

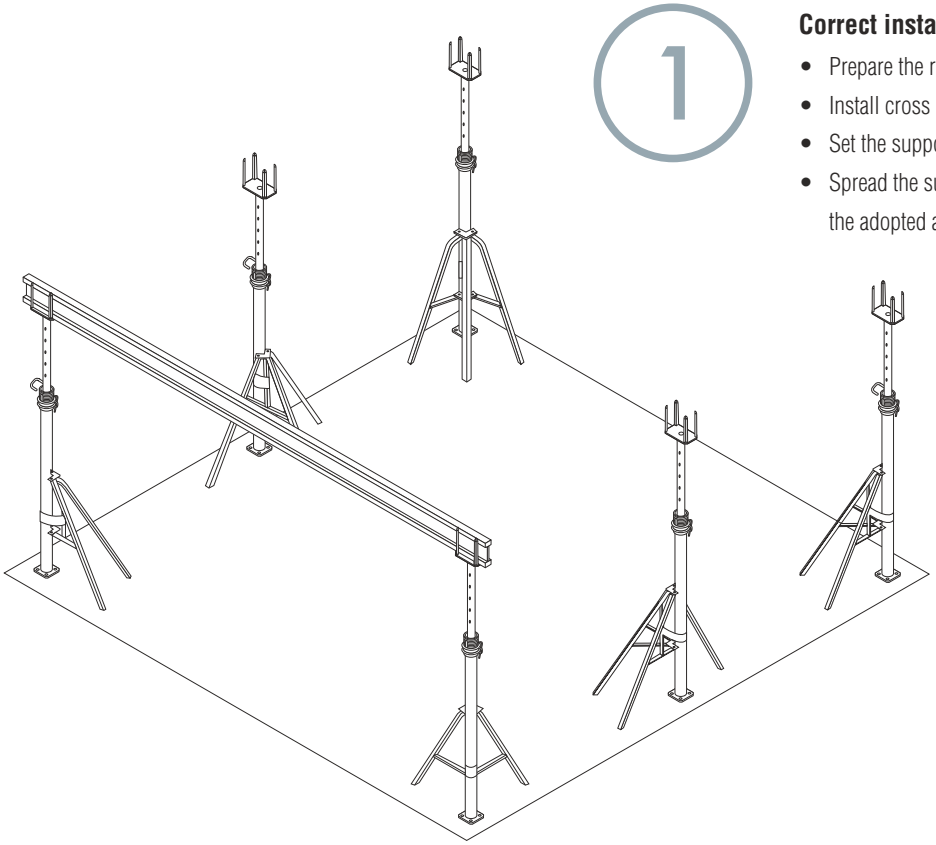

1

Correct installation of the ceiling formwork:

- Prepare the right amount of equipment at the assembly site.
- Install cross heads in supports.
- Set the supports at the correct height.
- Spread the supports using tripods in accordance with the adopted assumptions in the technical design.

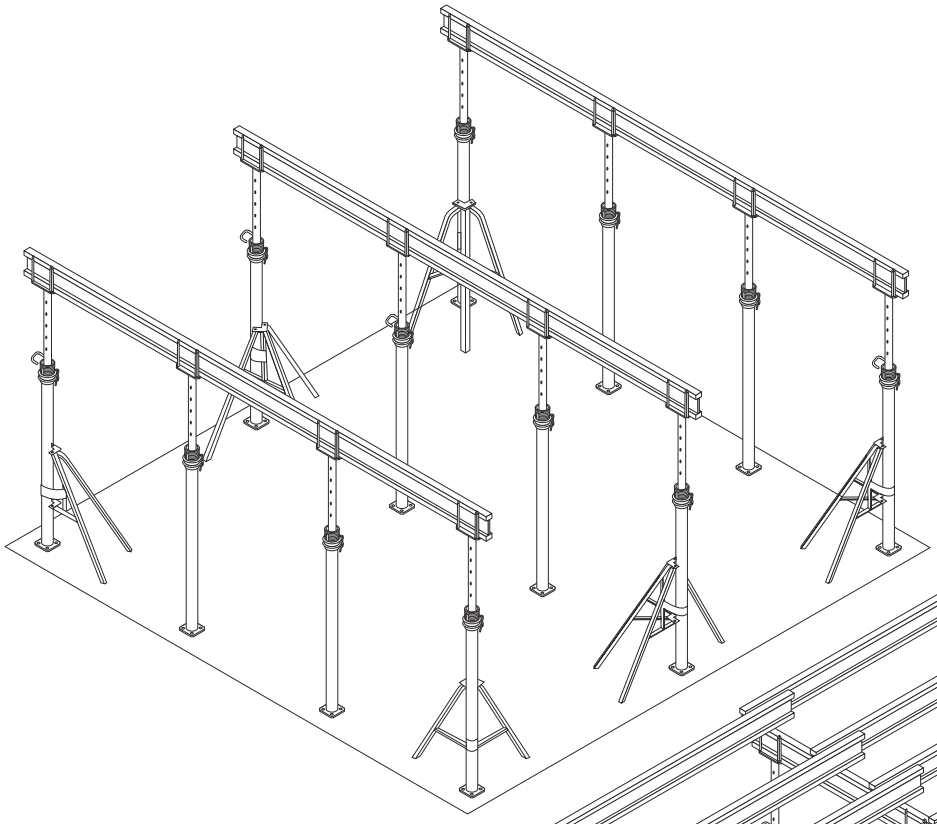

2

- Spread the longitudinal girders on the heads of the supports. The girders should protrude approx. 10 cm from the vertical axis of the support.
- Level the formwork using the support nut.

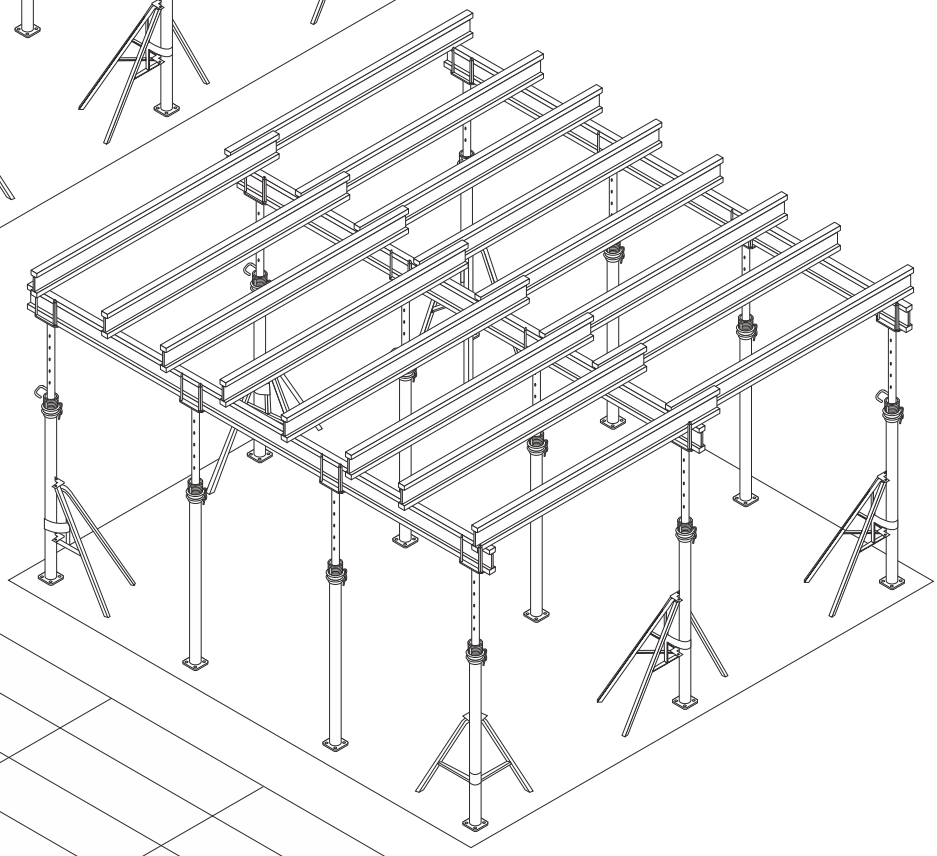

3

- Distribute the cross girders.

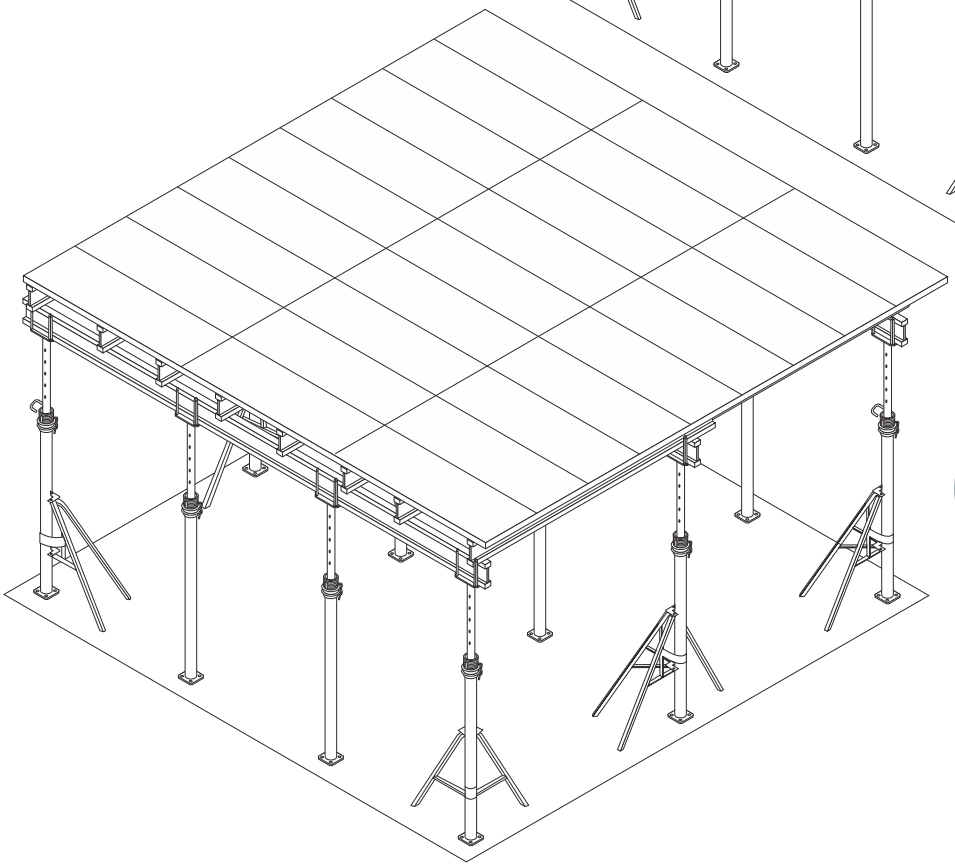

4

- Arrange the formwork plywood.

BAU-FORM Sp. zo.o. Sp. K.
Za Strumykiem Street 12
83-304 Przodkowo
e-mail: biuro@bau-form.pl
NIP 589-202-85-12
REGON 365772257

OPENING HOURS:
MON - FR: 8:00 - 16:00

PROJECT DEPARTMENT:
tel.: 739 014 666
projekty@bau-form.pl

ADMINISTRATION DEPARTMENT:
Ewa Kwidzińska
tel.: 502 193 654
ewa.kwidzinska@bau-form.pl

Agnieszka Kornata
tel.: 533 993 686
agnieszka.kornata@bau-form.pl

ACCOUNTANT:
Daniela Pacholczyk-Kuzan
tel.: 536 212 429
daniela.kuzan@bau-form.pl

Katarzyna Kwidzińska
tel.: 505 465 571
katarzyna.kwidzińska@bau-form.pl

SALES DEPARTMENT:
Sales Manager:
Iwona Krauze
tel.: 505 068 735
iwona.krauze@bau-form.pl

Jagoda Klinkosz
tel.: 536 229 958
jagoda.klinkosz@bau-form.pl

Monika Baranowska
tel.: 794 189 555
monika.baranowska@bau-form.pl

Sales Representative (Northern Poland)
Szymon Tutucki
tel.: 534 802 693
szymon.tutucki@bau-form.pl

Sales Representative (Central Poland)
Grzegorz Samulak
tel.: 603 755 540
grzegorz.samulak@bau-form.pl

Sales Representative (Southern Poland)
Mieczysław Ratajczyk
tel.: 534 516 795
mieczyslaw.ratajczyk@bau-form.pl

BAU-FORM
FORMWORK & SCAFFOLDING

www.bau-form.pl