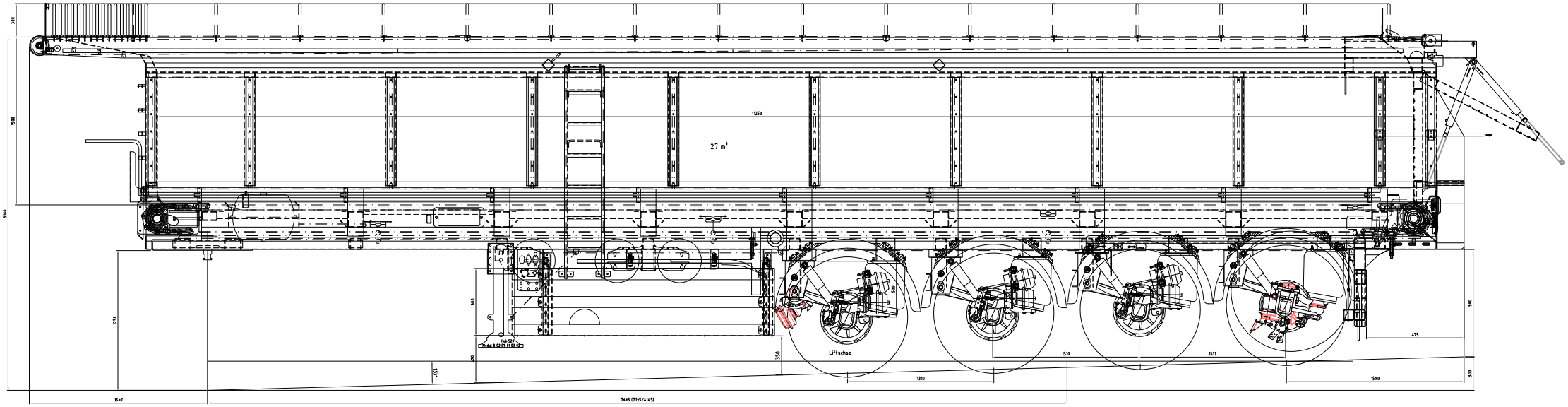
11250
27 m³
Liftachse
1310
1310
1311
1590
475
1597
7495 (7195/6145)

50374

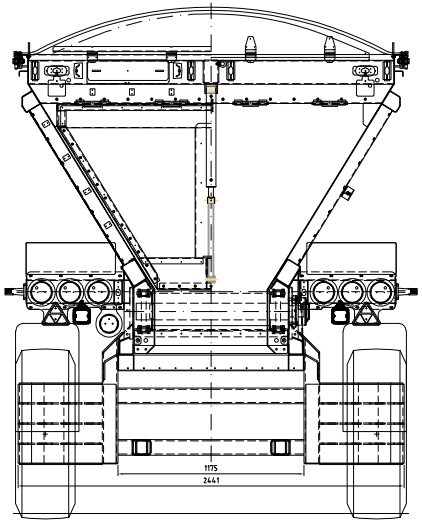
1175
2441