TKJ Machinery

ZX130

Skeleton

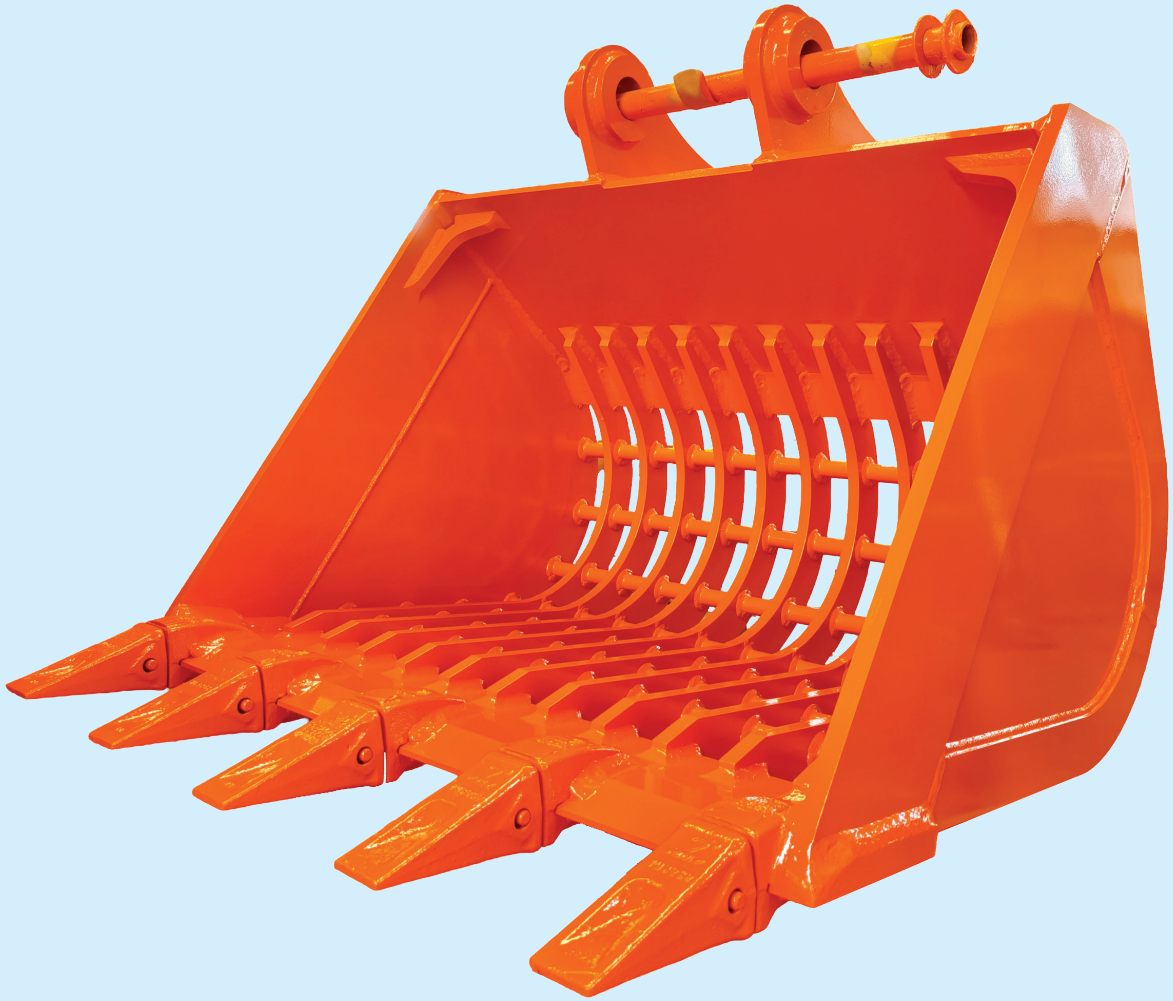

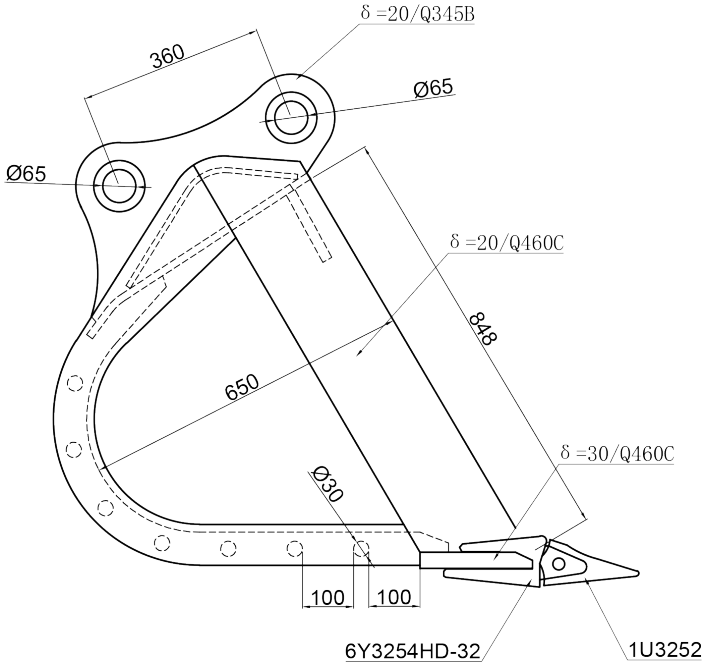

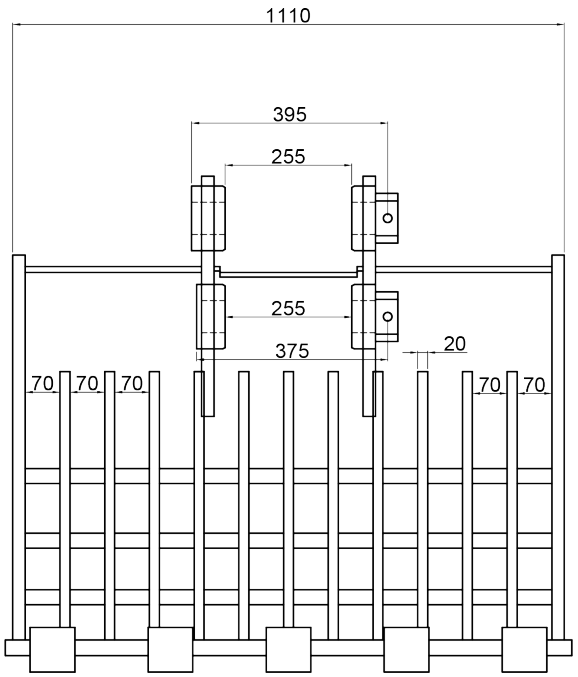

T.K.J. MATUSZEWSKI S.J.
PORUCZNIKA KRZYCHA 5,
86-300 GRUDZIADZ, POLAND
biuro@matuszewski.com.pl
+48 56 46 54 888

bucket capacity

1100mm

total weight

580kg