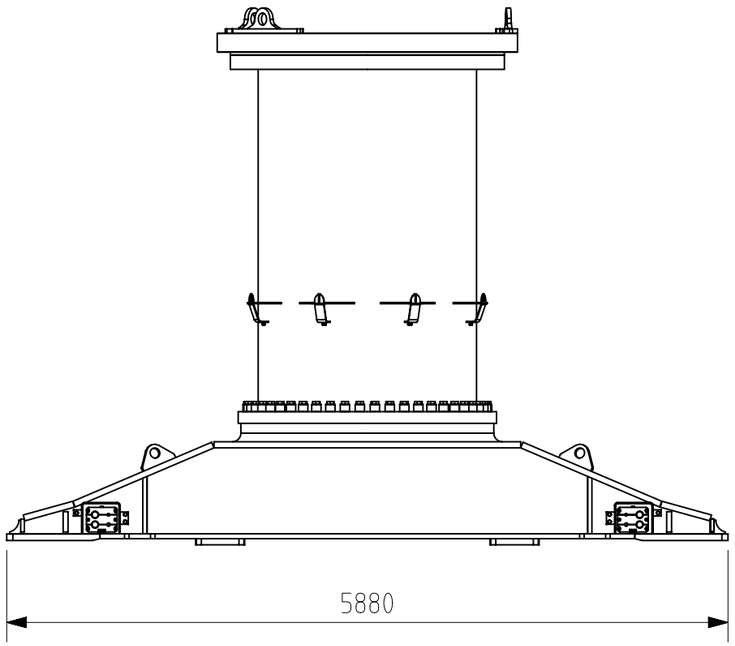

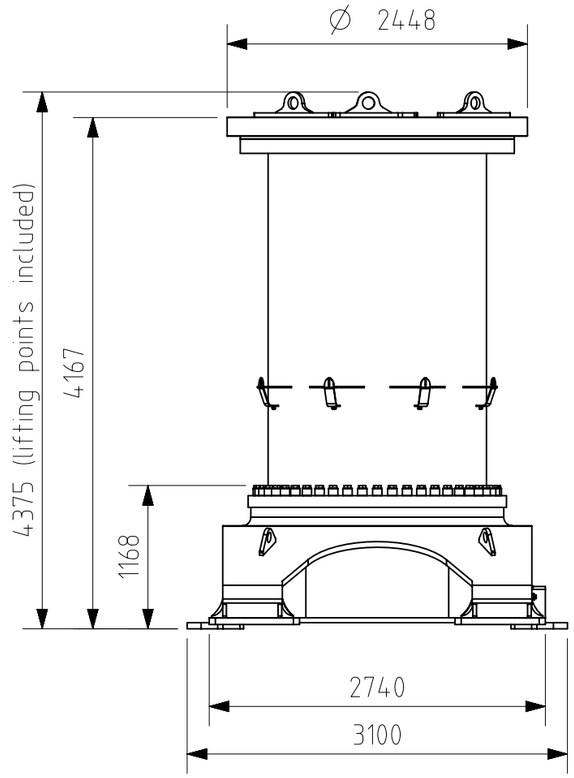

calculated weight: 22500kg

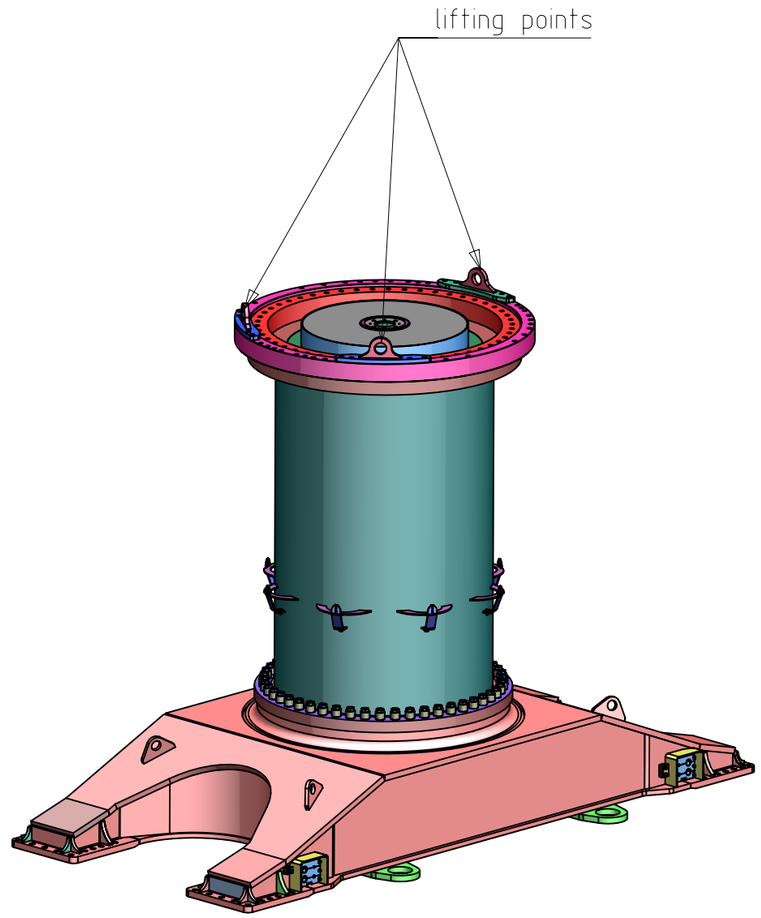

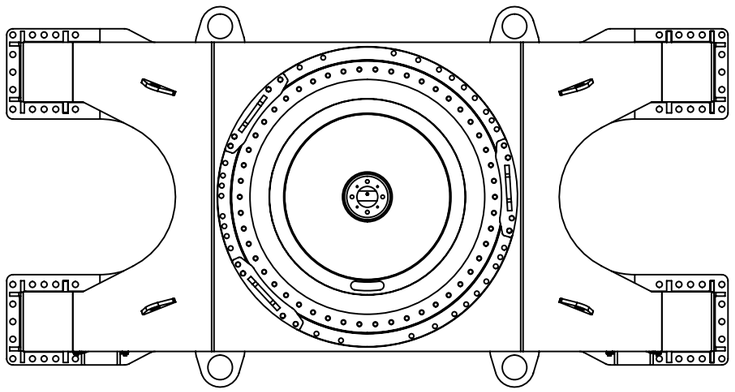

MATERIAL:	DIMENSION:	REMARK:

GENERAL TOLERANCE FOR ANGLE,CHAMPFER,FILLET: ISO2768-m

GENERAL TOLERANCE FOR LENGTH DIMENSIONS: ISO2768-m

> ≤	0.5 3	3 6	6 30	30 120	120 400	400 1000	1000 2000	2000 4000
TOL.	± 0.1	± 0.1	± 0.2	± 0.3	± 0.5	± 0.8	± 1.2	± 2

GENERAL TOLERANCE FOR SHAPE AND PLACE: ISO2768-K

GENERAL TOLERANCE FOR WELD DIMENSIONS: DIN8570 T1 class 'B'

> ≤	2 30	30 120	120 400	400 1000	1000 2000	2000 4000	4000 8000	8000 12000
TOL.	± 0.1	± 0.2	± 0.2	± 0.3	± 0.4	± 0.6	± 0.8	± 10

WEIGHT	DATE	DRAWN	SCALE	Page	
0	09-Jan-2013	kris	1/1	1/1	A3

TITLE	DRAWING NO.	Rev.
transportafmeting X-frame+buis	TT0018403	A