PRODUCT SPECIFICATION

TWH 216

WASTE HANDLER

85 kW (Diesel, EU Stage V / US EPA Tier 4)
75 kW (Electric)

14.6–17.1t

max. 9.0 m

www.terex.com/ecotec

Technical Data

Operating weight without attachments	
TWH 216	14.6–17.1 t
Diesel engine	
Manufacturer and model	Deutz TCD 3.6 L04
Design	4-cylinder in-line engine
Functionality	4-cycle diesel, common rail direct injection, turbocharged with intercooler, controlled exhaust gas recirculation, diesel particulate filter with continuous regeneration and SCR catalytic converter
Engine power	85 kW
Rated speed	2,000 rpm
Displacement	3.6 l
Cooling system	Water and charge air cooling with temperature controlled fan speed
Exhaust emission standard	EU Stage V / US Tier 4
Fuel tank	180 l Diesel
DEF / Urea tank	10 l AdBlue
Electric Motor	
Power	75 kW
Total connected load	100 kW
Motor start	Via soft start
Optional cable reel	Up to 50 metres (other lengths on request)
Electrical system	
Alternator	24 V / 95 A
Operating voltage	24 V
Battery	2×2 V / 110 Ah
Lighting system	2 × LED headlamps, turn indicators and tail lights
Travel drive	
Hydrostatic travel drive via infinitely variable axial piston motor with directly mounted travel brake valve, two-speed manual gearshift, 4-wheel drive	
Travel speed 1st gear	max. 5 kph
Travel speed 2nd gear	max. 19 kph
Gradeability	max. 40%
Turning radius	7.1 m
Turning radius with all-wheel steering	4.5 m
Swing Drive	
Drive	2-stage planetary gear with integrated multi-disc brake
Uppercarriage swing speed	0–8 rpm variable
Slewing lock	Electrically activated

Undercarriage	
Front axle	Planetary drive axle with integrated drum brake, rigidly mounted
Rear axle	Oscillating planetary drive rear axle with selectable oscillating lock
Outriggers	4-point stabilisers 2-point stabilisers with support blade
Tyres	9.00-20 pneumatic tyres without intermediate ring
Brakes	
Service brake	Hydraulically operated single-circuit braking system (drum brakes)
Parking brake	Electrically operated spring-loaded disc brake at transmission, acting on both front and rear axle
Hydraulic system	
Max. pump capacity	190 + 90 lpm
Max. operating pressure	350 bar
Hydraulic oil tank	135 l
Operator's Cab	
Cab	Infinitely variable hydraulic height-adjustable cabin with sliding door. Reinforced steel structure, soundproofed, heat-insulated panoramic windows for best all-round visibility, front window with roller blind, glass panel in the cabin roof with sliding blind. Heating and air conditioning, separate heat exchangers, fresh and recirculated air filters. Multifunction touch display, bottle holder, paper clip and multiple storage and mounting options. Digital radio (DAB+, USB, Bluetooth and hands-free), USB charging station 5V. Vertically adjustable cabin: viewing height of 5.3 m
Air conditioning	Automatic air-conditioning. Infinitely variable heating with 8-speed fan, 10 adjustable air nozzles, 3 defroster nozzles.
Operator's seat	Air-cushioned comfort seat with swinging armrests / joysticks, safety belt, lumbar support and headrest. Enables fatigue-free work due to universal adjustment options for the seat position, seat inclination and the arrangement of the seat cushion in relation to the armrests and joysticks.
Monitoring	Ergonomically arranged, glare-free multifunction display. Automatic monitoring and storage of deviating operating states (e.g. all hydraulic oil filters, hydraulic oil temperature, coolant and charge air temperature, diesel particulate filter loading, steering), visual and audible warning. Diagnostic option for the individual sensors via the multifunction display. Rear view and side view camera on the right with separate monitor.
Noise level	Sound power level (ambience) L_{WA} 97.3 dB(A) (metered) acc. to directive 2000/14/EC L_{WA} 99 dB(A) (guaranteed) acc. to directive 2000/14/EC Sound pressure level (inside the cabin) acc. to standard ISO 6396 L_{pA} 72 dB(A)
Vibrations	Weighted r.m.s. value of acceleration of upper limbs under 2.5 m/s² (98 in/s²) Weighted effective value of acceleration for the seat and feet under 0.5 m/s² (20 in/s²)
Certified in accordance with CE regulations	

Specification subject to change without notice.

Equipment

Engine	Standard	Option
Intercooler and coolant radiator	●	
Direct electronic fuel injection / common rail	●	
Advanced automatic idle incl. engine shut-off function	●	
Engine diagnostics interface	●	
Temperature-dependent fan drive	●	
Undercarriage		
All-wheel drive	●	
Drum brakes	●	
Rear axle oscillating lock	●	
4-point stabilisers	●	
Dozer blade in addition to 4-point stabilisers		●
2-point stabilisers and support blade		●
Stabiliser cylinders with integrated two-way check valves	●	
Piston rod protection on stabiliser cylinders	●	
Travel drive protection		●
Tool box	●	
Central lubrication point		●
Special paint (customer paint work)		●
Pneumatic tyres 9.00-20 without intermediate ring	●	
Solid rubber tyres 10.00-20 (Magnum) (2 L)		●
Solid rubber tyres 10.00-20 with intermediate ring (Solideal)		●
Uppercarriage		
Central lubrication point	●	
Cooling system with temperature-dependent fan drive	●	
Fan drive reversing function	●	
Separate cooling system for engine and hydraulic oil cooler	●	
Rear view camera	●	
Side view camera	●	
Special paint (customer paint work)		●

Cab	Standard	Option
Vertically adjustable cabin (max. viewing height of 5.3 m)	●	
Single-pane safety glass (ESG)	●	
Sliding window in cab door	●	
Windshield washer system	●	
Roof washer system		●
Air-cushioned operator seat with headrest, seatbelt, and lumbar support	●	
Seat heating		●
Joystick steering	●	
Steering column, height and tilt adjustable		●
Automatic air conditioning system	●	
Auxiliary heating incl. timer		●
Multi-function display	●	
Document clip	●	
Roof guard grille (FOPS)		●
Cabin front and top guard		●
12 V transformer		●
Digital radio (DAB+, USB, Bluetooth and hands-free system)	●	
12 V socket		●
Fire extinguisher, dry powder with holder		●
Travel alarm with rotating beacon		●
Other Equipment		
Joysticks with inductive driver recognition		●
Close proximity range limiter for dipper stick	●	
Coolant and hydraulic oil level monitoring system	●	
Overload and working area control		●
Rupture valves for lifting cylinders		●
Rupture valves for stick cylinders		●
Quick coupling on dipper stick	●	
Overload warning device		●
Active cyclone prefilter (TOP AIR)		●
Hydraulic oil preheating		●
Light packages LED		●
LED front headlights	●	
LED working lights cabin roof front	●	
Boom cylinder damping system (piston accumulator)		●
Fuchs Connect telematics system, incl. 5 years contract	●	

Further optional equipment available on request!
Specification subject to change without notice.

Dimensions
(all dimensions in mm)

Undercarriage equipped with 4-point stabilisers

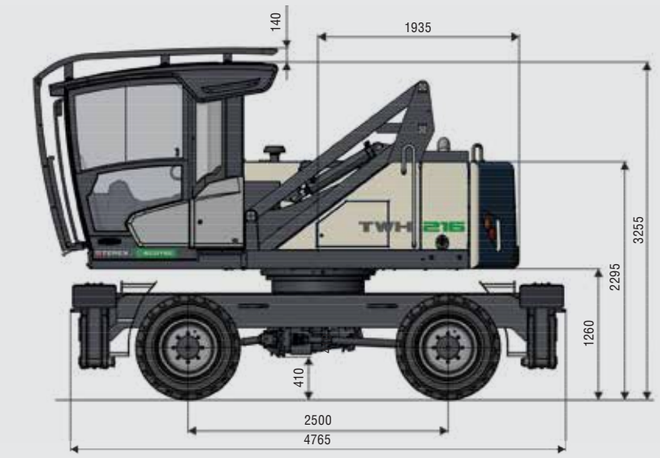

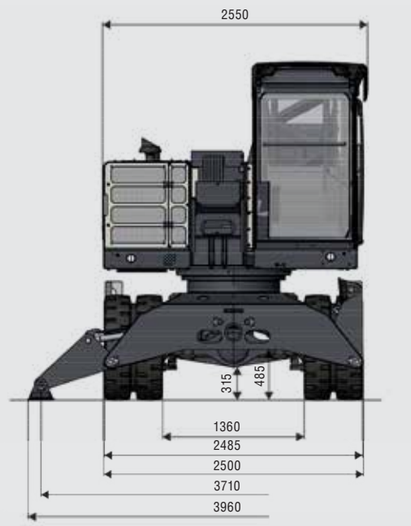

2-point stabilisers and support blade

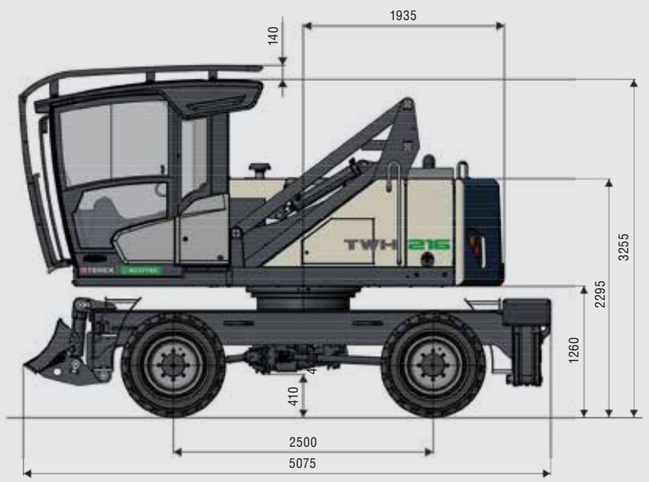

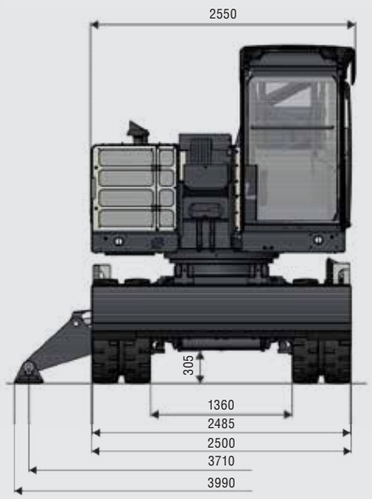

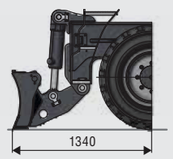

Transport Dimensions
(all dimensions in mm)

9.0 m reach
with dipper stick

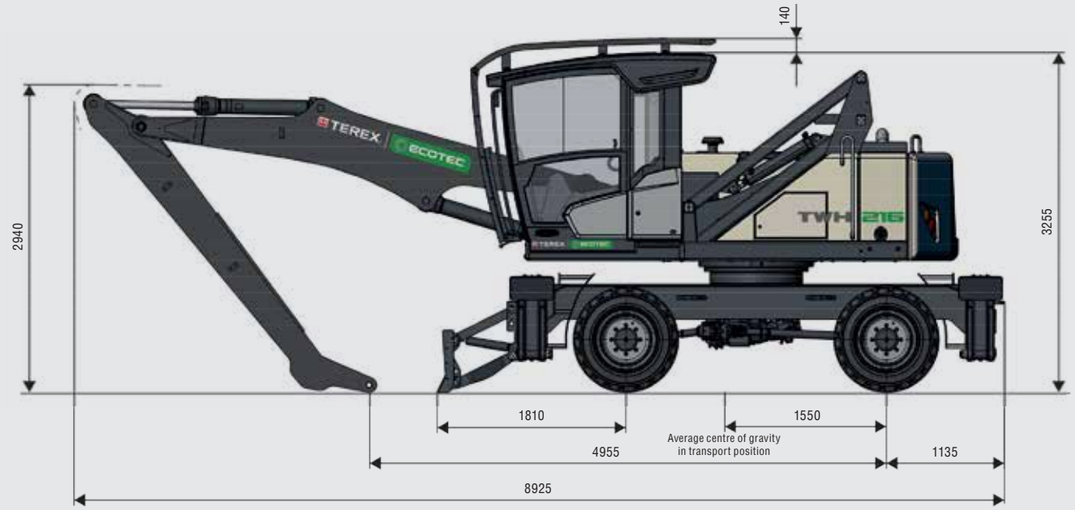

8.8 m reach
with multi-purpose stick

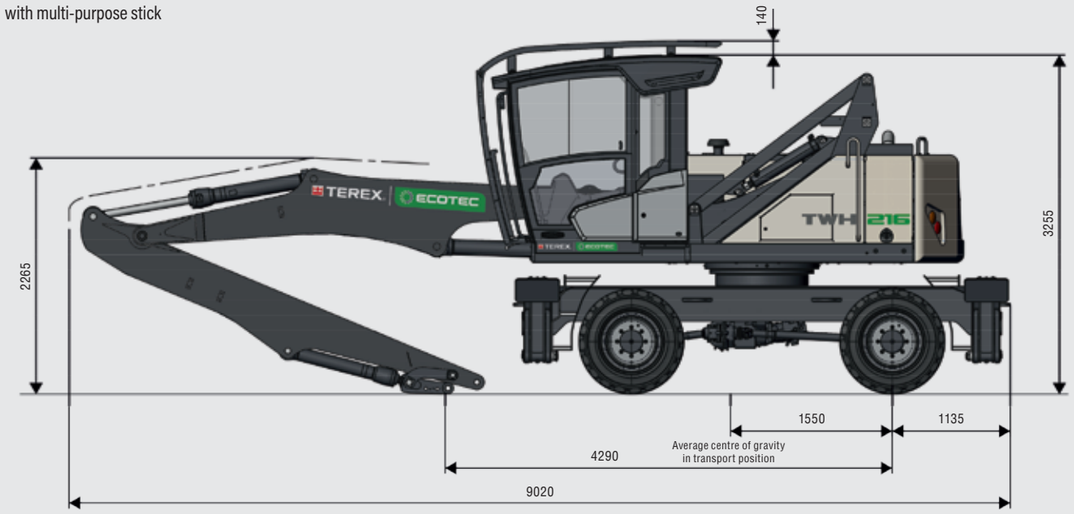

9.0 m reach with dipper stick

Loading equipment

Boom 4.7 m

Dipper stick 3.3 m

Cactus grab (lightweight material) 0.56 m³

Recommended attachments

Multi-tine grapple (lightweight material) up to 0.56 m³

Depending on density of goods

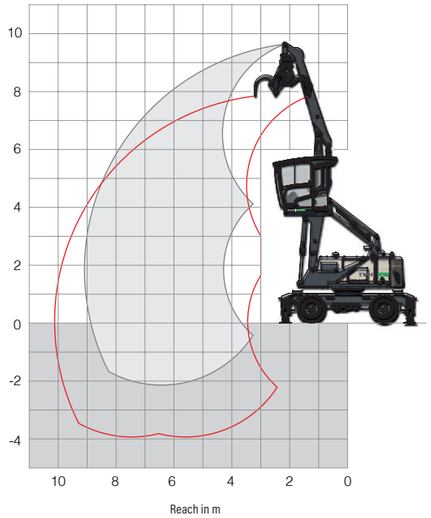

The lift capacity values are stated in metric tons (t). The pump pressure is 350 bar. In accordance with ISO 10567 the lift capacity values represents 75% of the static tipping loads or 87% of the hydraulic lifting force (marked *). On solid and level ground the values apply to a swing range of 360°. The (...) values apply in the longitudinal direction of the undercarriage. The values for "not supported" only apply via the steering axle or the locked oscillating axle. The weights of the attached load hoisting equipment (grab, load hook, etc.) must be deducted from the lift capacity values. The working load of the lifting device must be observed. In accordance with the EN 474-5 for object handling application hose rupture valves on the boom and stick cylinders, an overload warning device and the lift capacity table in the cab are required. For object handling application the machine has to be supported on a level ground.

Height [m]	Undercarriage stabilisation	Reach [m]			
		4.5	6	7.5	9
9	Without stabilisers	(3.4°)			
	With 4-pt stabilisers	3.4° (3.4°)			
	With 2-pt / support blade	3.4° (3.4°)			
7.5	Without stabilisers	(3.0°)	(2.7°)		
	With 4-pt stabilisers	3.0° (3.0°)	3.0° (3.0°)		
	With 2-pt / support blade	3.0° (3.0°)	3.0° (3.0°)		
6	Without stabilisers	(2.4°)	(2.7°)	(1.8°)	
	With 4-pt stabilisers	2.4° (2.4°)	2.8° (2.8°)	2.7° (2.7°)	
	With 2-pt / support blade	2.4° (2.4°)	2.8° (2.8°)	2.4° (2.7°)	
4.5	Without stabilisers	(2.4°)	(2.6°)	(1.8°)	
	With 4-pt stabilisers	2.4° (2.4°)	2.9° (2.9°)	2.7° (2.7°)	
	With 2-pt / support blade	2.4° (2.4°)	2.9° (2.9°)	2.4° (2.7°)	
3	Without stabilisers	(3.8°)	(2.5°)	(1.8°)	(1.3°)
	With 4-pt stabilisers	4.2° (4.2°)	3.6° (3.6°)	2.8° (2.8°)	2.0° (2.0°)
	With 2-pt / support blade	4.2° (4.2°)	3.3° (3.6°)	2.4° (2.8°)	1.8° (2.0°)
1.5	Without stabilisers	(3.5°)	(2.3°)	(1.7°)	(1.3°)
	With 4-pt stabilisers	5.5° (5.5°)	3.7° (3.7°)	2.7° (2.7°)	1.9° (1.9°)
	With 2-pt / support blade	4.9° (5.5°)	3.2° (3.7°)	2.3° (2.7°)	1.8° (1.9°)
0	Without stabilisers	(3.3°)	(2.2°)	(1.6°)	
	With 4-pt stabilisers	5.1° (5.1°)	3.5° (3.5°)	2.5° (2.5°)	
	With 2-pt / support blade	4.7° (5.1°)	3.1° (3.5°)	2.2° (2.5°)	
-1.5	Without stabilisers		(2.2°)		
	With 4-pt stabilisers		2.8° (2.8°)		
	With 2-pt / support blade		2.8° (2.8°)		
					Max. reach 9.0 m
1.9	Without stabilisers				(1.3°)
	With 4-pt stabilisers				1.9° (1.9°)
	With 2-pt / support blade				1.7° (1.9°)

8.8 m reach with multi-purpose stick

Loading equipment

Boom 4.7 m

Multi-purpose stick 3.5 m

Cactus grab (lightweight material) 0.3 m³

Recommended attachments

Sorting grapple up to 0.4 m³

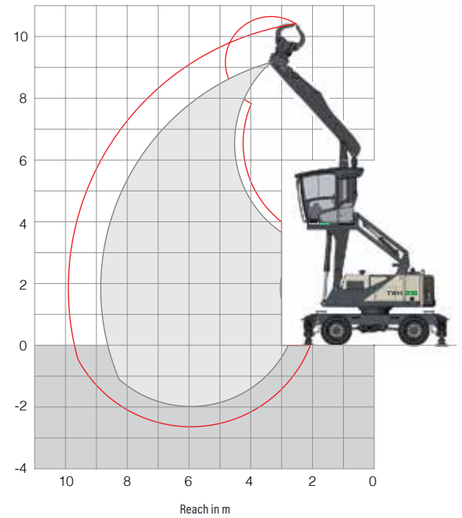

The lift capacity values are stated in metric tons (t). The pump pressure is 350 bar. In accordance with ISO 10567 the lift capacity values represents 75% of the static tipping loads or 87% of the hydraulic lifting force (marked *). On solid and level ground the values apply to a swing range of 360°. The (...) values apply in the longitudinal direction of the undercarriage. The values for "not supported" only apply via the steering axle or the locked oscillating axle. The weights of the attached load hoisting equipment (grab, load hook, etc.) must be deducted from the lift capacity values. The working load of the lifting device must be observed. In accordance with the EN 474-5 for object handling application hose rupture valves on the boom and stick cylinders, an overload warning device and the lift capacity table in the cab are required. For object handling application the machine has to be supported on a level ground.

Height [m]	Undercarriage stabilisation	Reach [m]			
		3	4.5	6	7.5
7.5	Without stabilisers		(2.6°)	(2.2°)	
	With 4-pt stabilisers		2.6° (2.6°)	2.2° (2.2°)	
	With 2-pt / support blade		2.6° (2.6°)	2.2° (2.2°)	
6	Without stabilisers		(2.5°)	(2.6°)	(1.7°)
	With 4-pt stabilisers		2.5° (2.5°)	2.6° (2.6°)	1.9° (1.9°)
	With 2-pt / support blade		2.5° (2.5°)	2.6° (2.6°)	1.9° (1.9°)
4.5	Without stabilisers		(2.6°)	(2.5°)	(1.7°)
	With 4-pt stabilisers		2.6° (2.6°)	2.9° (2.9°)	2.5° (2.5°)
	With 2-pt / support blade		2.6° (2.6°)	2.9° (2.9°)	2.3° (2.5°)
3	Without stabilisers	(7.4°)	(3.7°)	(2.3)	(1.6°)
	With 4-pt stabilisers	7.8° (7.8°)	4.7° (4.7°)	3.3° (3.3°)	2.5° (2.5°)
	With 2-pt / support blade	7.8° (7.8°)	4.7° (4.7°)	3.2° (3.3°)	2.2° (2.5°)
1.5	Without stabilisers	(2.4°)	(3.3°)	(2.2)	(1.5°)
	With 4-pt stabilisers	2.4° (2.4°)	5.2° (5.2°)	3.4° (3.4°)	2.5° (2.5°)
	With 2-pt / support blade	2.4° (2.4°)	4.7° (5.2°)	3.0° (3.4°)	2.1° (2.5°)
0	Without stabilisers	(2.8°)	(3.1°)	(2.1°)	(1.5°)
	With 4-pt stabilisers	2.8° (2.8°)	4.9° (4.9°)	3.3° (3.3°)	2.3° (2.3°)
	With 2-pt / support blade	2.8° (2.8°)	4.4° (4.9°)	2.9° (3.3°)	2.1° (2.3°)
-1.5	Without stabilisers		(3.1°)	(2.0°)	(1.5°)
	With 4-pt stabilisers		3.7° (3.7°)	2.6° (2.6°)	1.7° (1.7°)
	With 2-pt / support blade		3.7° (3.7°)	2.6° (2.6°)	1.7° (1.7°)
					Max. reach 8.8 m
1.9	Without stabilisers				(1.2°)
	With 4-pt stabilisers				1.8° (1.8°)
	With 2-pt / support blade				1.6° (1.8°)

CAMPSIE

20 Keans Hill Road
Campsie Industrial Estate
BT47 3YT, Northern Ireland

Tel.: +44 (0) 28 7122 3110

DUNGANNON

32 Farlough Road
Dungannon, Co. Tyrone
BT71 4DT, Northern Ireland

Tel: +44 (0) 28 87 718 500

NEWTON

22 Whittier Street
Newton, New Hampshire
USA, 03858

Tel: +1 (603) 382 0556

Dealer Stamp:

July 2021. The material in this document is for information only and is subject to change without notice. Terex Ecotec assumes no liability resulting from errors or omissions in this document, or from the use of the information contained herein. Due to continual product development we reserve the right to change specifications without notice. Any product performance figures given in this brochure are for guidance purposes only. This information does not constitute an expressed or implied warranty or guarantee, but shows text examples provided. These results will vary depending on product settings, screen media and sizes, feed source and types of material being processed. Photographs are for illustrative purposes only. Some or all of the machines in the illustrations may be fitted with optional extra. Products and services listed may be trademarks, service marks or trade names of Terex Corporation and/or its subsidiaries in the USA and other countries. All rights reserved. Terex is a registered trademark of Terex Corporation in the USA and many other countries © 2021 Terex Corporation.