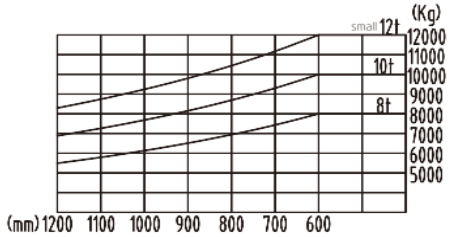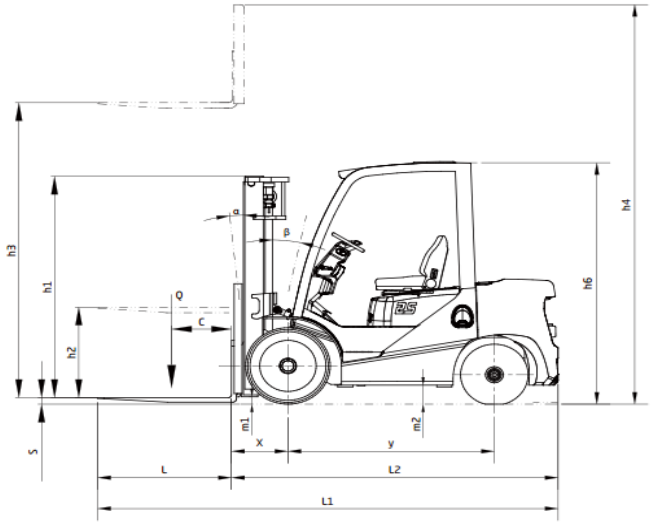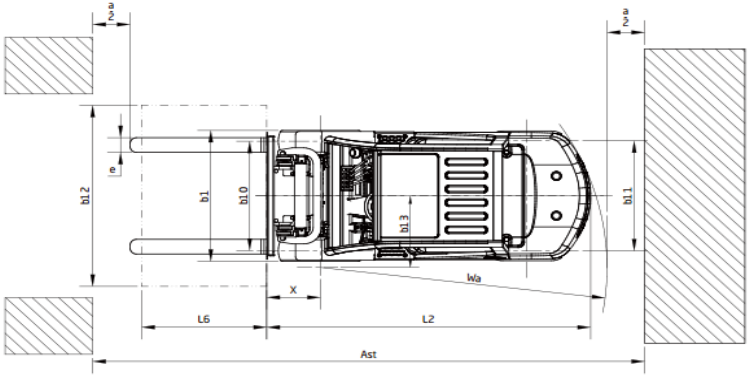Kendetegn	1.1	**Manufacturer**		**HANGCHA GROUP CO.,LTD.**	
	1.2	**Manulacturer's type designation**		CPCD120-XXW96	
	1.3	**Drive: electric (battery or mains), diesel, petrol, fuel gas**		Diesel	
	1.5	**Rated capacity/rated load**	Q (kg)	12000	
	1.6	**Load centre distance**	c (mm)	600	
	1.8	**Load distance, centre of drive axle to fork**	x (mm)	739	
		Rear overhang	mm	595	
	1.9	**Wheelbase**	y (mm)	2800	
Vægt	2.1	**Service weight**	kg	14800	
	2.2	**Axle loading, laden front/rear**	kg	24520/2280	
	2.3	**Axle loading, unladen front/rear**	kg	6400/8400	
Dæk, undervogn	3.2	**Tyre size, front**		9,0-20-14PR	
	3.3	**Tyre size, rear**		9,0-20-14PR	
	3.6	**Thread, front**	b10 (mm)	1628	
	3.7	**Thread, rear**	b11 (mm)	1700	
Dimensioner	4.1	**Tilt of mast/fork carriage forward/backward**	α/β(°)	6/12	
	4.2	**Height, mast lowered**	h1 (mm)	3100	4,8M TRIP
	4.3	**Free lift**	h2 (mm)	1405	
	4.4	**Lift**	h3 (mm)	4800	
	4.5	**Height, mast extended**	h4 (mm)	6505	
	4.7	**Height of overheadguard**	h6 (mm)	2730	
	4.20	**Length to face of forks**	l2 (mm)	4349	
	4.21	**Overall width**	b1(mm)	2165	
	4.22	**Fork dimensions**	s/e/l (mm)	65x150x2000	
	4.31	**Ground clearance, laden, mast**	m1 (mm)	250	
	4.32	**Ground clearance, centre of wheelbase**	m2 (mm)	339	
	4.35	**Turning radius**	Wa (mm)	4040	
		Aisle width for pallets 800 x 1200 lengthways **Aisle width for pallets 1000 x 1200 crossways**	mm	5979/6179	
Ydelsesdata	5.1	**Travelspeed, laden/unladen**	km/h	-/ 29	
	5.2	**Lift speed, laden/unladen**	m/s	0,330/-	
	5.3	**Lowering speed, laden/unladen**	m/s	0,455/-	
	5.5	**Drawbar pull, laden/unladen**	N	65000/49000	
	5.7	**Gradebility, laden/unladen**	%	>20/-	
Forbrændingsmotor	7.1	**Engine manufacturer / type**		TCD3.6 L4	
		Emissions standard		Stage V/T4f	
	7.2	**Engine power according to DIN ISO 1585**	kW	85	
	7.3	**Rated Speed**	min	2200	
	7.4	**No. of cylinders/displacement**	(-)/(cm3)	4/3621	
	7.10	**Battery voltage / capacity**	V/Ah	24/90	
		Rated torque	N·m/r/min	460/1600	
		cylinder bore x stroke	mm	98x120	
		Transmission manufacturer		Okamura	
		Transmissionstype		Powershift	
		No. of gears FWD/REV		3/3	
Yderligere data	10.1	**Operating pressure for attachments**	bar	200	
	10.4	**Fuel capacity**	liter	150