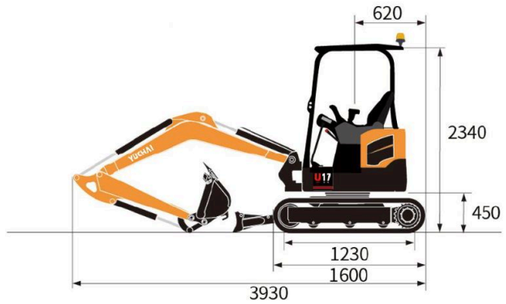

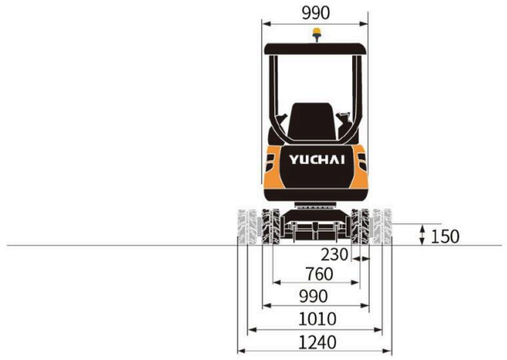

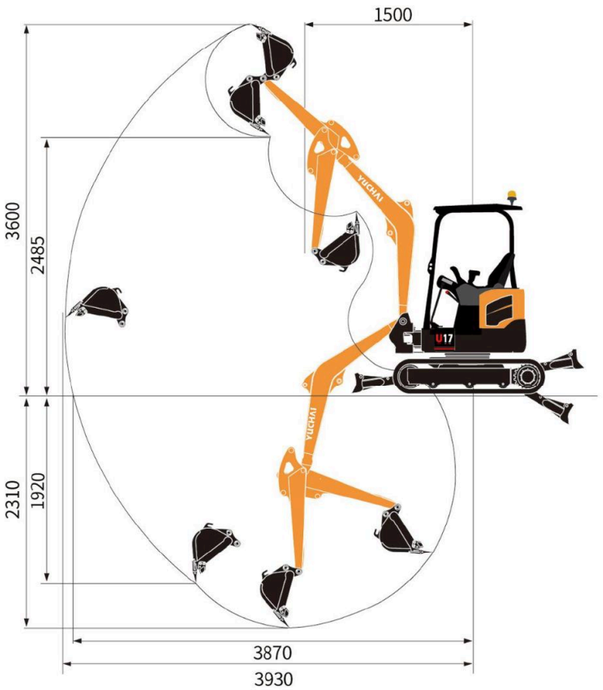

U17 Technical Specification

Basic parameters	
Machine weight	1720 kg
Bucket capacity	0.05 m^3
Width of bucket	450 mm
Performance parameters	
Engine model	Kubota D902
Emission Standard	Euro V /EPA Tier 4F/CN IV
Engine power	11.8kW/2300rpm
Max. Gradeability	30 °
Max. digging force of arm	9.5 kN
Max. digging force of bucket	17.2 kN
Traveling speed	2/4 km/h
Max. hauling force	22 kN
Slewing speed of platform	8.5~10.5rpm
Operating parameters	
Max. digging height	3600 mm
Max. digging depth	2310 mm
Max. digging radius	3930 mm
Max. digging radius on ground level	3870 mm
Max. dumping height	2485 mm
Min. slewing radius	1500 mm
Max. vertical digging depth	1920 mm
Transportation dimensions	
Overall length	3930 mm
Overall width	990 mm
Overall height	2340 mm
Other Parameters	
Width of undercarriage	990mm / 1240mm
Length of track	1600 mm
Width of track	230 mm
Minimum ground clearance	150 mm
Height between platform and ground	450 mm
Platform tail turning radius	620 mm
Length to center of rollers	1230 mm
Fuel tank capacity	16 L
Hydraulic oil tank capacity	16 L
Track gauge	760/1010 mm
Working Pressure	24 Mpa
Flow rate	64.4 L/Min
AUX1 Pressure/ Flow rate	21 Mpa | 18/10 L/Min
AUX2 Pressure/ Flow rate	21 Mpa | 36 L/Min
Arm length	950 mm
Boom length	1828 mm
Steering head angle	60°(L)/55° (R)

*Specifications are subject to change without prior notice .

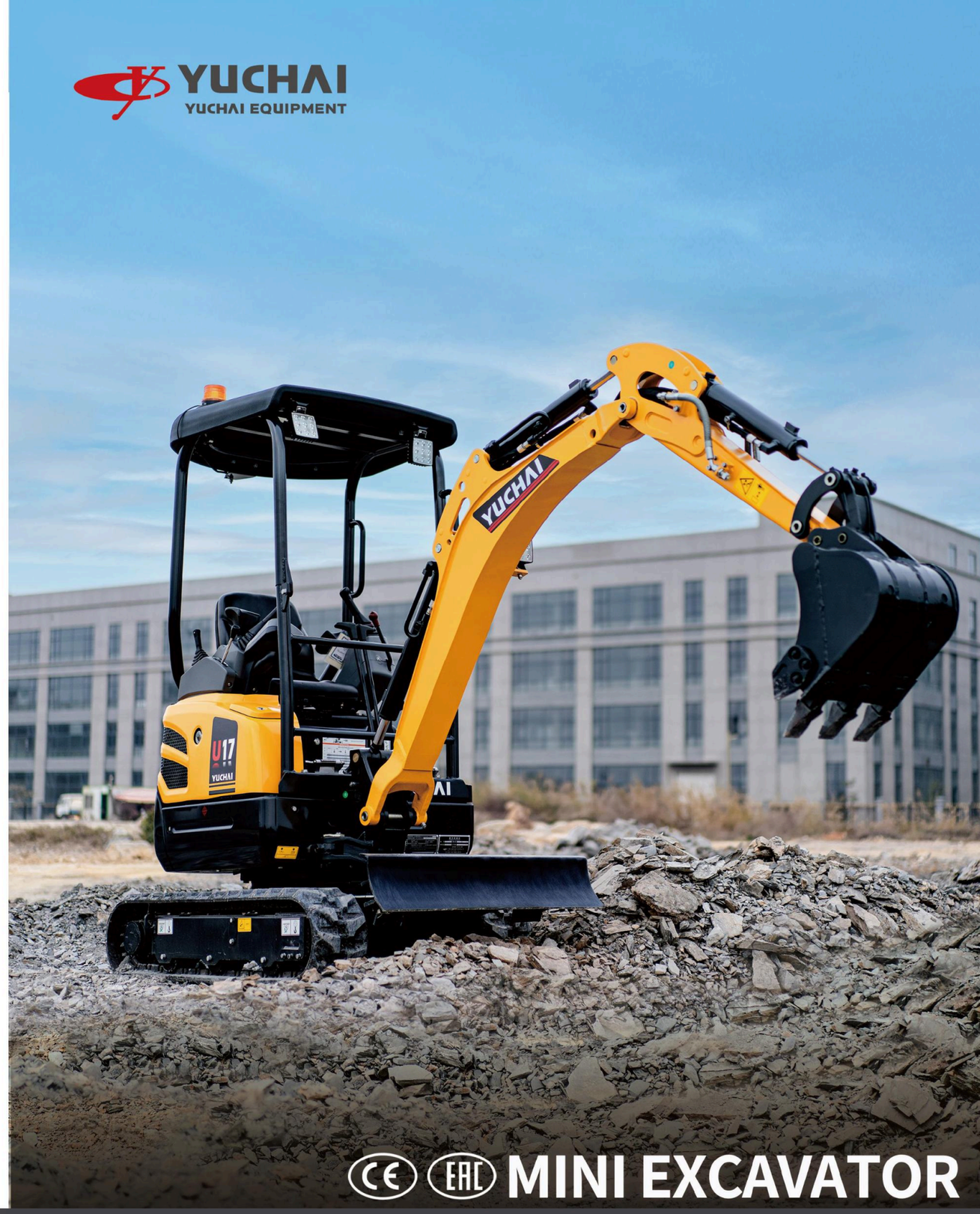

YUCHAI EXCLUSIVE SELLER SK/CZ
MAX-PERFORMANCE, S.R.O.
YUCHAI EXCLUSIVE SELLER SK & CZ

Address: Bzovík 184, 962 41 Bzovík
Email: info@yuchai-bagre.sk
Tel.: +421 907 075 414
Website.: www.yuchai-bagre.sk

BILLING DETAILS:
IČO: 36024937
DIČ: 2021337802
IČ DPH: SK2021337802

Machine weight : 1720 kg | Engine model : Kubota D902
Bucket capacity: 0.05 m^3 | Engine power : 11.8 kW / 2300 rpm
Overall dimensions (L x W x H): 3930mm x 990mm x 2340 mm

U17

Equipment

- Standards and requirements for special equipment vary by country.
- For more details on equipment options, please feel free to contact us.

Component Part	Description	Standard	Optional
Canopy	LCD instrument	•	
	High-back suspension seat		•
	TOPS	•	
Working device	Steering head	•	
	Quick connector for AUX. pipes		•
	Tilt rotator		•
	Mechanical quick Coupler	•	
	Hydraulic quick coupler lines		•
	Hydraulic quick coupler		•
	250mm Bucket		•
	450mm Bucket	•	
	1,000mm Ditch cleaning bucket		•
	950mm Arm	•	
	AUX 1 + hammer line	•	
	Hydraulic hammer		•
	Auger		•
	Dozer blade	•	
	Arm cylinder protection plate		•
	Bucket cylinder protection plate		•
	Boom holding valve		•
	Arm holding valve		•
Tracks	230mm Rubber tracks	•	
	230mm Steel tracks		•
	Telescopic chassis	•	
Hydraulic system	Single electric proportional control joystick		•
	Load-sensing hydraulic system	•	
	ISO&SAE control switch		•
	AUX1	•	
Lighting	2 LED work lights at the front	•	
	1 Rear LED work light	•	
	1 Boom work light	•	
	Beacon on canopy	•	
Others	Extra counter weight		•

U17 Max. digging radius-3930 mm (without quick coupler)

Standard Arm's Digging Force: 9.5 kN (market-leading performance)

- **Dual-arm versatility:** Standard/extended arm can meet the needs of different working conditions.
- **Key specs:** 0.05m³ bucket | 10.5 rpm swing | 17.2kN bucket digging force.
- **Robust construction:** The heavy-duty machine structure, engineered for China's demanding applications, handles North American and European job sites with ease.

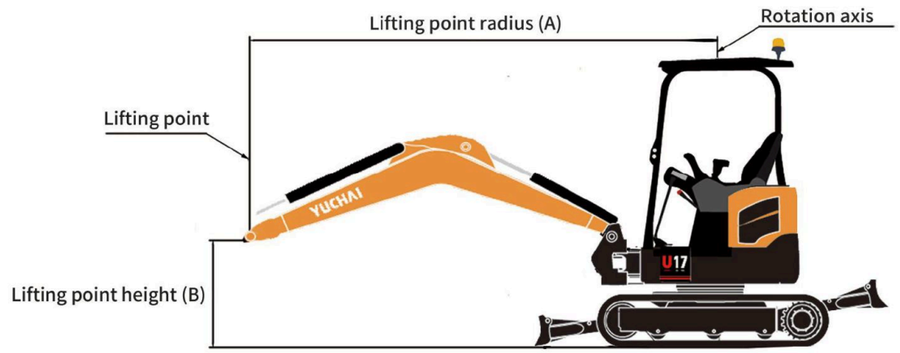

Standard arm, standard counterweight(C=kg)											
A	Arm	Max.		2.0 m		1.5 m		—		—	
B	(A=)										
2.0 m	950mm	—	—	260/260	260	—	—	—	—	—	—
	1100mm	—	—	—	—	—	—	—	—	—	—
1.5 m	950mm	—	—	380/340	310	440/440	440	—	—	—	—
	1100mm	—	—	300/300	300	—	—	—	—	—	—
0.5 m	950mm	270/150	140	580/300	280	—	—	—	—	—	—
	1100mm	240/130	120	540/290	270	—	—	—	—	—	—
0 m	950mm	—	—	550/300	270	—	—	—	—	—	—
	1100mm	—	—	530/280	260	500/430	390	—	—	—	—
0.5 m	950mm	—	—	490/290	270	680/460	420	—	—	—	—
	1100mm	—	—	480/280	250	700/430	390	—	—	—	—
-1.5 m	950mm	—	—	310/300	280	450/450	430	—	—	—	—
	1100mm	—	—	320/280	260	470/440	400	—	—	—	—

Explanation

The data contained in these tables represent the lifting capacity in accordance with ISO standard 10567. They don' t include the weight of the bucket and correspond to 75% of the maximum static tipping load or 87% of the hydraulic lifting power.
Data marked * are the hydraulic limits of the lifting power.