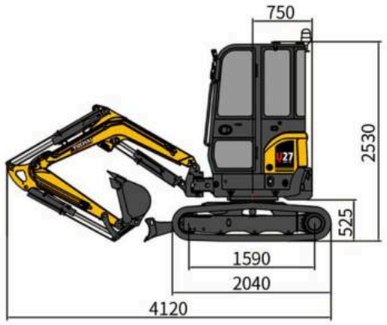


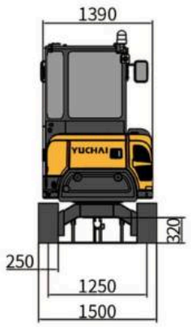


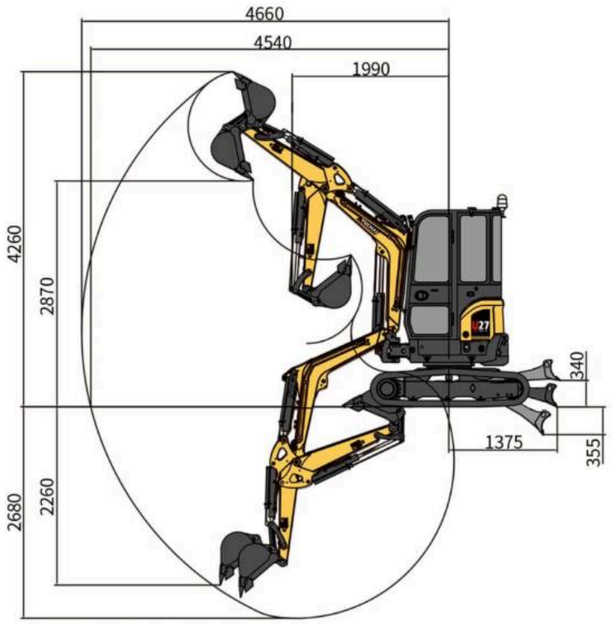


## U27 Technical Specification

| | |
|---|---|
| **Basic parameters** | |
| Machine weight | 2600kg (Canopy)/2740kg (Cabin) |
| Bucket capacity | 0.09 $m^3$ |
| Width of bucket | 510 mm |
| **Performance parameters** | |
| Engine model | Yanmar 3TNV80F |
| Emission Standard | Euro V / EPA Tier 4F |
| Engine power | 15.2kW/2500rpm |
| Max. Gradeability | 30° |
| Max. digging force of arm | 14.4 kN |
| Max. digging force of bucket | 23.1 kN |
| Traveling speed | 4.2/2.3 km / h |
| Max. hauling force | 26 kN |
| Slewing speed of platform | 10~12 rpm |
| **Operating parameters** | **Standard / Longer arm** |
| Max. digging height | 4170mm / 4260mm |
| Max. digging depth | 2540mm / 2680mm |
| Max. digging radius | 4520mm / 4660mm |
| Max. digging radius on ground level | 4400mm / 4540mm |
| Max. dumping height | 2780mm / 2870mm |
| Min. slewing radius | 1950mm / 1990mm |
| Max. vertical digging depth | 2240mm / 2260mm |
| **Transportation dimensions** | |
| Overall length (standard /longer) | 4110mm / 4120mm |
| Overall width | 1500 mm |
| Overall height | 2490mm(Canopy) / 2530 mm (Cabin) |
| **Other parameters** | |
| Width of undercarriage | 1500 mm |
| Length of track | 2040 mm |
| Width of track | 250 mm |
| Minimum ground clearance | 320 mm |
| Height between platform and ground | 525 mm |
| Platform tail turning radius | 750 mm |
| Length to center of rollers | 1590 mm |
| Fuel tank capacity | 30 L |
| Hydraulic oil tank capacity | 25L |
| Track gauge | 1250 mm |
| Working Pressure | 24Mpa |
| Flow rate | 61.6L/Min |
| AUX1 Pressure/ Flow rate | 21 Mpa\| 18/10 L/Min |
| AUX2 Pressure/ Flow rate | 21 Mpa\| 36 L/Min |
| Arm length (standard /longer) | 1150 mm/1300 mm |
| Boom length | 2020 mm |
| Steering head angle | 47°(L)/74°(R) |

*Specifications are subject to change without prior notice .

YUCHAI
YUCHAI EQUIPMENT

CE EAC MINI EXCAVATOR

**YUCHAI EXCLUSIVE SELLER SK/CZ**
MAX-PERFORMANCE, S.R.O.
YUCHAI EXCLUSIVE SELLER SK & CZ

**Address:** Bzovík 184, 962 41 Bzovík
**Email:** info@yuchai-bagre.sk
**Tel.:** +421 907 075 414
**Website.:** www.yuchai-bagre.sk

**BILLING DETAILS:**
**IČO:** 36024937
**DIČ:** 2021337802
**IČ DPH:** SK2021337802

Machine weight : 2600kg (Canopy)/2740kg (Cabin) | Engine model : Yanmar 3TNV80F
Bucket capacity: 0.09 $m^3$ | Engine power : 15.2 kW / 2500 rpm
Overall dimensions (L x W x H): 4110mm x 1500mm x 2490 mm (Cabin)

# U27

# Equipment

- Standards and requirements for special equipment vary by country.
- For more details on equipment options, please feel free to contact us.

| Component Part | Description | Standard | Optional |
|---|---|---|---|
| Cabin/Canopy | LCD instrument | • | |
| | Radio with USB(for cabin only) | • | |
| | Cup holder | • | |
| | High-back suspension seat | | • |
| | Heater(for cabin only) | • | |
| | FOPS | | • |
| | TOPS | • | |
| | Front wipers(for cabin only) | • | |
| | Rearview mirrors | • | |
| | Cigarette lighter(for cabin only) | • | |
| Working device | Steering head | • | |
| | Mechanical quick Coupler | • | |
| | Quick connector for AUX. pipes | | • |
| | Hydraulic quick coupler pipes | | • |
| | Hydraulic quick coupler | | • |
| | Tilting coupler | | • |
| | Tiltrotator | | • |
| | 300mm Bucket | | • |
| | 510mm Bucket | • | |
| | 1,200mm Bucket | | • |
| | 1,150 mm Arm | • | |
| | 1,300 mm Arm | | • |
| | Hammer lines | • | |
| | Hydraulic hammer | | • |
| | Auger | | • |
| | Thumb | | • |
| | Dozer blade | • | |
| | Dozer & Boom cylinder protection plate | • | |
| | Arm cylinder protection plate | • | |
| | Bucket cylinder protection plate | • | |
| | Boom holding valve | | • |
| | Arm holding valve | | • |
| Tracks | 250 mm Rubber track | • | |
| | 300 mm Rubber track | | • |
| | 250 mm Steel track | | • |
| Hydraulic system | Traveling alarm | | • |
| | Dual electric proportional control joystick | | • |
| | Load sensing hydraulic system | • | |
| | ISO&SAE control switch | | • |
| | AUX1 | • | |
| | AUX2 | • | |
| | AUX1 adjustable pressure | | • |
| | AUX1 & AUX2 adjustable flow | | • |
| Lighting | 2 LED Work Lights at the front | • | |
| | 1 Rear LED work light | • | |
| | 1 Boom LED work light | • | |
| | Beacon on the canopy/cabin | • | |
| Others | Extra counterweight | | • |



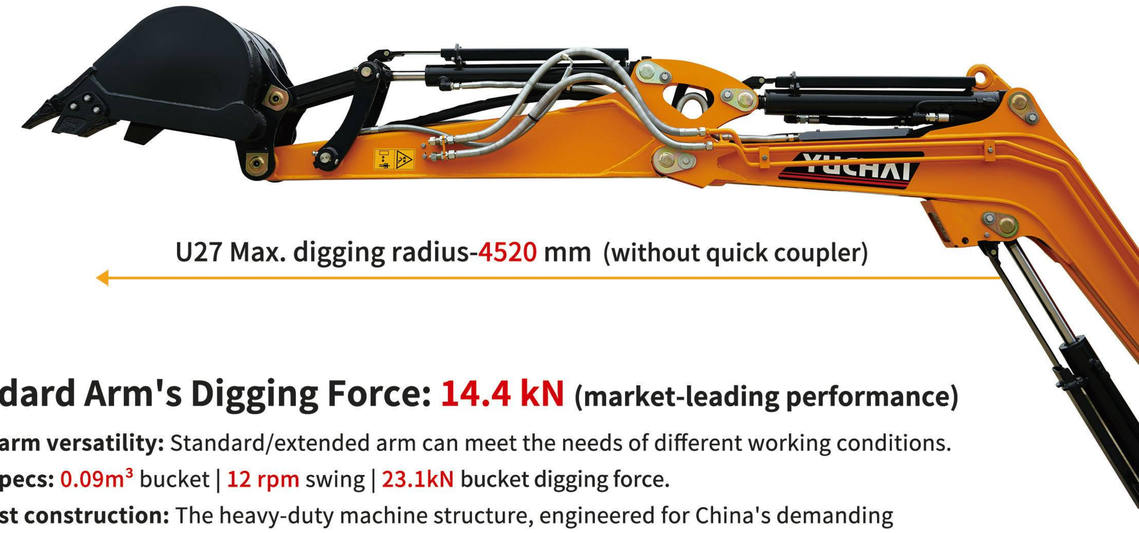


U27 Max. digging radius-4520 mm (without quick coupler)

## Standard Arm's Digging Force: 14.4 kN (market-leading performance)

- **Dual-arm versatility:** Standard/extended arm can meet the needs of different working conditions.
- **Key specs:** 0.09m³ bucket | 12 rpm swing | 23.1kN bucket digging force.
- **Robust construction:** The heavy-duty machine structure, engineered for China's demanding applications, handles North American and European job sites with ease.

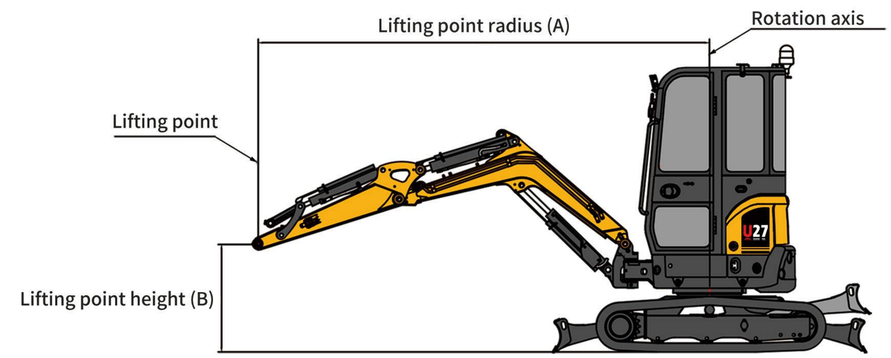


| Standard arm, standard counterweight(C=kg) | | | | | | | | | | | |
|---|---|---|---|---|---|---|---|---|---|---|---|
| A | | Max. | | 3.5 m | | 3.0 m | | 2.5 m | | 2.0 m | |
| B | (A=) | | | | | | | | | | |
| 3.0 m | 3020 | 500*/500* | 500*/500* | — | — | 500*/500* | 500*/500* | — | — | — | — |
| 2.5 m | 3380 | 390/375 | 500*/500* | — | — | 480* /480* | 480* /480* | — | — | — | — |
| 2.0 m | 3620 | 340/330 | 500*/405 | 565/350 | 500*/420 | 505*/505* | 505*/505* | 535*/535* | 535*/535* | — | — |
| 1.5 m | 3750 | 310/305 | 530*/375 | 355/345 | 540*/415 | 435/425 | 565*/565* | 585/675* | 675*/675* | 840*/840* | 840*/840* |
| 1.0 m | 3810 | 300/295 | 545*/355 | 340/330 | 565*/405 | 430/415 | 680*/515* | 550/530 | 825*/680 | 780/765 | 1065*/915 |
| 0.5 m | 3780 | 300/290 | 560*/355 | 335/325 | 605*/400 | 410/400 | 720*/500 | 535/530 | 935*/650 | 720/700 | 1305*/895 |
| 0 m | 3650 | 305/300 | 570*/365 | 325/315 | 625*/390 | 400/390 | 760*/485 | 525/505 | 965*/640 | 705/680 | 1280*/860 |
| -0.5 m | 3450 | 335/320 | 565*/400 | — | — | 390/380 | 720*/475 | 515/500 | 965*/630 | 725/690 | 1255*/855 |
| -1.0 m | 3120 | 390/390 | 595*/465 | — | — | 430/420 | 625*/505 | 545/545 | 850*/660 | 750/750 | 1120*/905 |
| -1.5 m | 2610 | 485/480 | 580*/580* | — | — | — | — | 515/515 | 600*/600* | 680/665 | 830*/830* |

### Explanation

The data contained in these tables represent the lifting capacity in accordance with ISO standard 10567. They don' t include the weight of the bucket and correspond to 75% of the maximum static tipping load or 87% of the hydraulic lifting power.
Data marked * are the hydraulic limits of the lifting power.